MOULDPRO®

CATALOGUE

EDITION 16

FUN
STRONG
EXCELLENCE
PASSION
EFFECTIVE
FLEXIBLE
RESPONSIBLE
BRAVE
CARING
PARTNERSHIP
POSITIVE
PEOPLE
PROGRESSIVE
TRUSTED
BRAVE
PASSION
BEST
FLEXIBLE
FUN
PASSION
STRONG
AUTHENTIC
ADAPTABLE
SUSTAINABLE
FLEXIBLE
PEOPLE
BEST
FUN
BRAVE
VALUE
TRANSPARENT
PASSION
DYNAMIC
GLOBAL
FLEXIBLE
INTEGRITY
CREATIVE
TRUSTED
PASSION
BEST
BRAVE
TRUSTED
FORWARD THINKING
EFFECTIVE
EXPERIENCE
COMMITTED
PASSION
RESOURCES
FORWARD THINKING
SUCCESSFUL
APPROACHABLE
DYNAMIC
REPUTATION
PROACTIVE
PEOPLE
VALUE
EFFECTIVE
FUN
FLEXIBLE
BEST
PASSION
FOCUSED
ADAPTABLE
CREATIVE
TRUSTED
FUN
POSITIVE
AUTHENTIC
CARING
PEOPLE
FUN
NETWORK
BRAVE
PROGRESSIVE
PASSION
PEOPLE
FOCUSED
BEST
FLEXIBLE
PROACTIVE
INTEGRITY
FORWARD THINKING
CREATIVE
BEST
FUN

MOULDPRO

CONTENTS

01. Mould Cooling 5

Couplers 6
Hoses 41
Hose Protection 48
Hose Cutting 50
Hose Assembly Tool 51
Hose Clamping 52
Fittings 54
Valves 61
Push In Fittings 67
Manifolds 68
Sealant & Tape 71

02. Thermal Management 72

Digital Flow Monitors 73
Analogue Flow Meters 86
De-Scaling 89
Pressure Testing 90
Water Treatment 91
Filters 92
Valves with Filters 94

03. Consumables 96

Mould Cleaning 97
Absorbents 101
Mould Protection 102
Mould Release 104
Mould Lubricant 106
Nano Mould Coating 109
Purging Compound 110

04. Temperature Control 112

Hot Runner Controllers 113
Heater Bands 117
Thermocouples 122
Connectors 125
Cable Cutter and Stripper 137
Cable Glands 138
Cables 139
Thermometers 140
Thermal Cameras 142

05. Material Handling 144

Loader Hoses 145
Hot Air Hoses 146
Hose Clamps 147
Camlock Couplings Aluminum 148
Hopper Magnets 150
Material Scoops 150
Balances and Moisture Analyser 151

06. End of Arm Toolling (EOAT) 154

Quick Change System 156
Profile & Channel Nuts 162
Profile Connectors 166
Clamps 174
Gripper Arms 180
Vacuum Cup Mounts 184
Vacuum Cups 194
Sprue Grippers 208
Finger Grippers 218
General Purpose Grippers 228
Speciality Grippers 234
Nippers 242
Cylinders & Slides 250
Fittings, Tube & Manifolds 258
Electronics & Sensors 264

07. End of Barrel 270

Removable Nozzle Tips MOULDPRO Type 271
OEM Nozzle Tips Arburg Type 275
OEM Nozzle Tips Fanuc Type 277
OEM Nozzle Tips Demag Type 278
OEM Nozzle Tips Engel Type 279
Custom Order Forms 280
Screw Tips 288
Tip Spanner 289

08. Tools & Accessories 290

Gate Cutters 291
Deburring Tools 294
Soft Tools 295
Pry Bars 296
Accessories 297
Polishing & Abrasives 298
Brushes 313
Compressed Air Blow Guns 317
Measuring Tools 318
Magnifying Glasses 319

09. Machine Accessories 320

Mould Screens 321
Ejector Couplings 322
Machine Mounts 325
Linear Transducers 326
Hydraulic Iso Couplers 328

10. Mould Clamping 332

Power Clamps 333
Mechanical Clamps 335
Nuts & Washers 337
Straight Studs 338
T-Nuts 339

11. Mould Handling 340

Lifting Points 341
Super Lifting Points 342
Eye Bolts and Shackles 343
Lifting Chain Slings 345
Mould Feet 348
Mould Splitting Tables 349

12. Mould Components 354

Ejector Pins 355
Sleeve Ejectors 360
Flat Ejectors 361
Core Pins 362
Dowel Pins 363
Angle Guide Pins 365
Socket Head Cap Screws 366
Shoulder Screws 367
Spring Plungers 368
Iso Springs 369
Mould Cycle Counter 372
Round Counters 373

CONTENTS

5 01. Mould Cooling

72 02. Thermal Management

96 03. Consumables

112 04. Temperature Control

144 05. Material Handling

154 06. End of Arm Tooling (EOAT)

270 07. End of Barrel

290 08. Tools & Accessories

320 09. Machine Accessories

332 10. Mould Clamping

340 11. Mould Handling

354 12. Mould Components

01. Mould Cooling

6 Couplers

41 Hoses

48 Hose Protection

50 Hose Cutting

51 Hose Assembly Tool

52 Hose Clamping

54 Fittings

61 Valves

67 Push In Fittings

68 Manifolds

71 Sealant & Tape

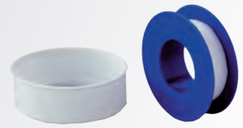

8 International Series 20 / 30 / 50

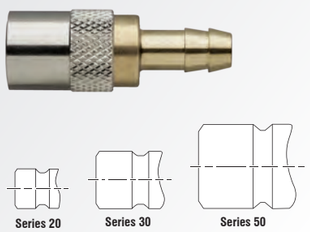

16 European Series 09 / 13 / 19

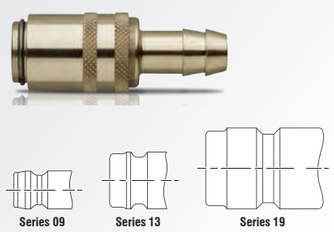

24 French Series 08 / 12

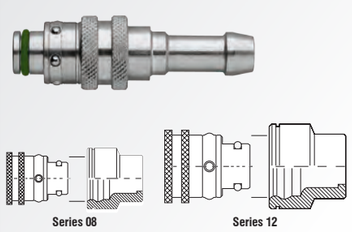

28 French Matic Series 6 / 9 / 12 / 16 / 25

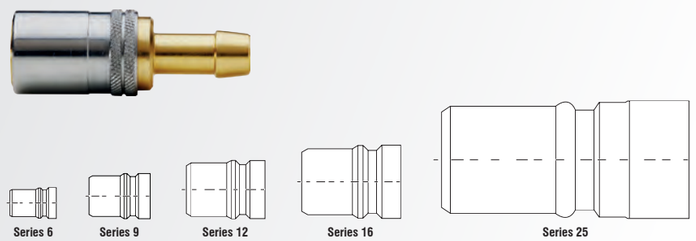

32 BBI Couplings Series

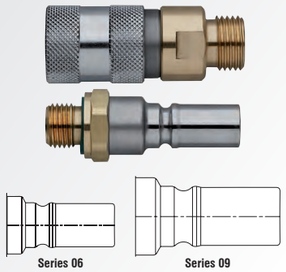

36 Large Flow Couplings 75 / 85 / 96 / 105

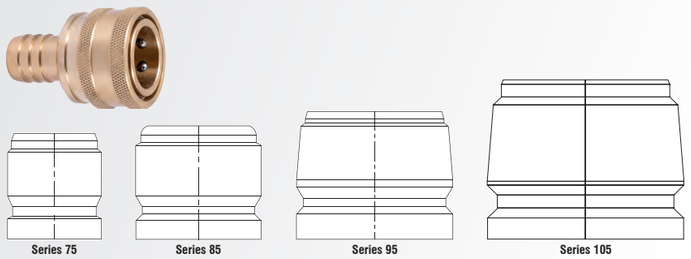

39 Multi Couplings Series

MOULDPRO

SAFETY COUPLING TYPE TS

The patented quick connect safety coupling features an automatic locking mechanism that offers an effective solution for accidental disconnection and unlocking.

The coupling is designed for use with aggressive media such as mould cooling applications with hot and cold water (as well as thermal oil) between -20°C and +200°C*.

High quality FKM o-rings mean that the coupling is ideal for mould cooling circuits especially for high temperature.

The couplings are available in both European and International series making it fully compatible with existing moulds; it is not necessary to change the connector nipples.

* water up to 160° C oil up to 200°C

Coupling in unlocked position, sleeve is in default position ready to connect

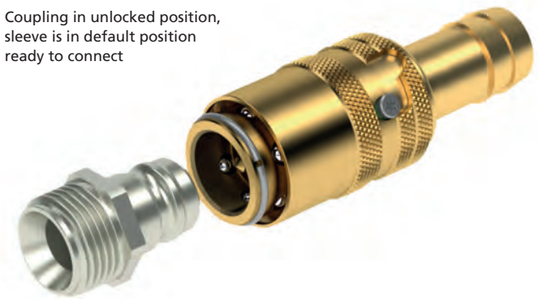

Coupling in locked position, and green code indicates that the coupling is locked and safe

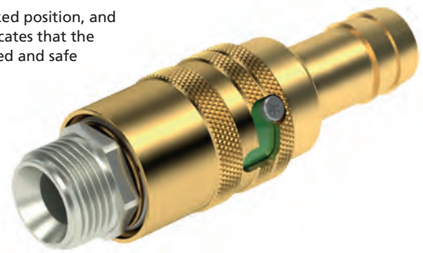

The Mouldpro quick connect safety coupling system is characterized by its simple and intuitive connection process.

Even in difficult and hidden areas, this enables a safe operation. The connection takes place via automatic locking.

An additional colour coding on the locking sleeve indicates a correct and secure connection clearly and unequivocally.

The disconnecting process can be blindly executed due to the forced guidance of the locking sleeve – it requires an axial movement of turning the locking sleeve, basically a manual unlocking motion.

An accidental or unintentional disconnection is practically impossible.

1. Strengthened release sleeve made of high resistant special brass
2. Separate O-ring sealing on the connector
3. Special-Hitec-FKM-O-ring
4. Forced guidance design with visual colour coding on the locking sleeve
5. Patented automatic safety locking mechanism (dependable security when disconnecting)

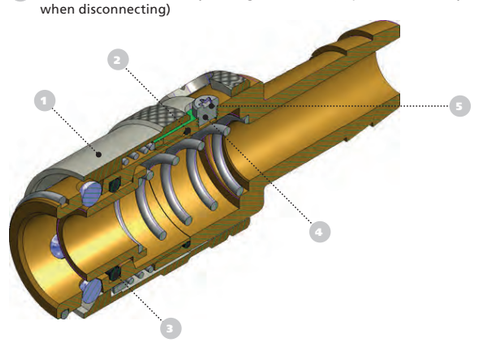

Couplers	**p. 5**	Hose Assembly Tool	p. 51	Push In Fittings	p. 67
Hoses	p. 41	Hose Clamping	p. 52	Manifolds	p. 68
Hose Protection	p. 48	Fittings	p. 54	Sealant & Tape	p. 71
Hose Cutting	p. 50	Valves	p. 61		

Nominal Diameter **20 / 30 / 50**

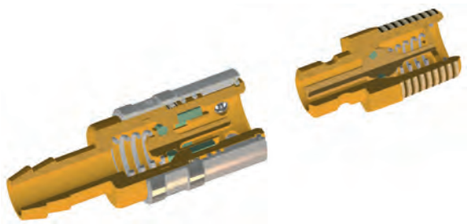

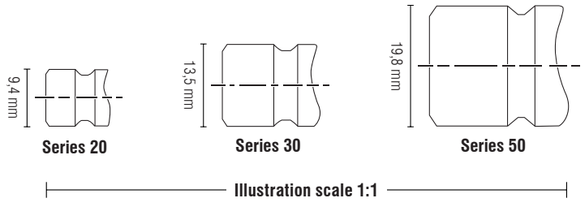

Technical Description

Coupling series especially developed for connecting coolant lines on injection moulds.

Fully interchangeable with other brands with the same plug profiles.

All dimensions and tolerances according to original specs.

Chart

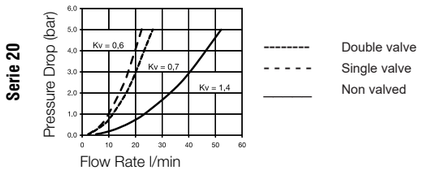

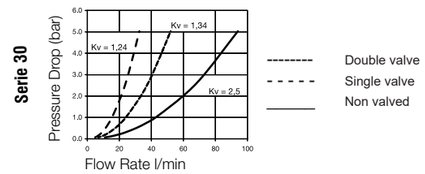

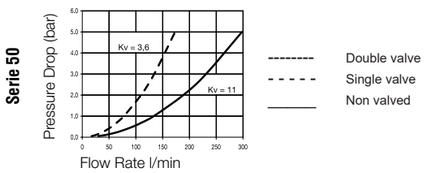

Material

Coupling		**Plug**	
Back Body	Brass	Plug Profile	Brass
Valve Body	Brass	Back Body	Brass
Sleeve	Brass (without Valve)	Valve	Brass
Sleeve	Brass, Nickel Plated (with Valve)	Spring	AISI 301
Valve	Brass	Seal	FKM
Locking Balls	AISI 420		
Spring	AISI 301		
Seal	FKM		

Working Pressure

15 bar, maximum static working pressure with safety factor of 4 to 1.

Working Temperature

Standard Couplers
Water up to 140°C
Oil up to 180°C

TS Couplers
Water up to 160°C
Oil up to 200°C

Mould Cooling | Couplers *International Series*

Couplers	**p. 5**	Hose Assembly Tool	p. 51	Push In Fittings	p. 67
Hoses	p. 41	Hose Clamping	p. 52	Manifolds	p. 68
Hose Protection	p. 48	Fittings	p. 54	Sealant & Tape	p. 71
Hose Cutting	p. 50	Valves	p. 61		

1

Mould Cooling

Straight Coupling

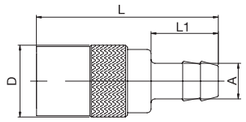

DN	Series			A	D	L	L1	
4,5	20	**20K6V**	**20K6**	6	18	46	17	10
6	20	**20K10V**	**20K10**	10	18	51	22	10
6	20	**20K13V**	**20K13**	13	18	51	22	10
7	30	**30K10V**	**30K10**	10	24	64	22	10
9	30	**30K13V**	**30K13**	13	24	66,5	25	10
15	50	**50K19V**	**50K19**	19	32	89	32	5

Safety Coupling, Type TS, Straight

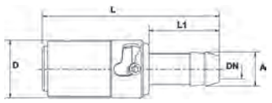

DN	Series			A	D	L	L1	
6	20	**20K10V-TS**	**20K10-TS**	10	18	59,5	22	5
7	30	**30K10V-TS**	**30K10-TS**	10	23	64,5	25	5
9	30	**30K13V-TS**	**30K13-TS**	13	23	64,5	25	5
15	50	**50K19V-TS**	**50K19-TS**	19	32	90,8	34	1

Push Lock - Straight Coupling

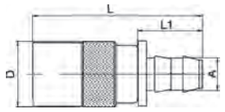

DN	Series			A	D	L	L1	
6	20	**20K10V-PL**	**20K10-PL**	10	18	58	28	10
9	30	**30K10V-PL**	**30K10-PL**	10	24	64,5	28	10
9	30	**30K13V-PL**	**30K13-PL**	13	24	64,5	28	10
15	50		**50K19-PL**	19	32	89	38	5

90° Coupling

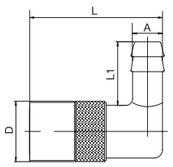

DN	Series			A	D	L	L1	
4,5	20	**20K6V/90**	**20K6/90**	6	18	40	19	10
6	20	**20K10V/90**	**20K10/90**	10	18	40	22	10
7	30	**30K10V/90**	**30K10/90**	10	24	56	22	10
9	30	**30K13V/90**	**30K13/90**	13	24	56	28,5	10
15	50	**50K19V/90**	**50K19/90**	19	32	77	32	5

Safety Coupling, Type TS, 90°

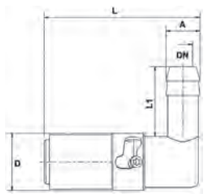

DN	Serie			A	D	L	L1	
6	20	**20K10V/90-TS**	**20K10/90-TS**	10	18	52,5	22	5
7	30	**30K10V/90-TS**	**30K10/90-TS**	10	23	68,5	25	5
9	30	**30K13V/90-TS**	**30K13/90-TS**	13	23	68,5	25	5
15	50	**50K19V/90-TS**	**50K19/90-TS**	19	32	80,8	34	1

Couplers	**p. 5**	Hose Assembly Tool	p. 51	Push In Fittings	p. 67
Hoses	p. 41	Hose Clamping	p. 52	Manifolds	p. 68
Hose Protection	p. 48	Fittings	p. 54	Sealant & Tape	p. 71
Hose Cutting	p. 50	Valves	p. 61		

Push Lock - 90°Coupling

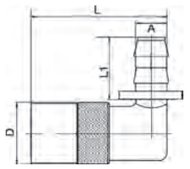

DN	Series			A	D	L	L1	
6	20	**20K10V-90-PL**	**20K10-90-PL**	10	18	40,5	28	10
7	30	**30K10V-90-PL**	**30K10-90-PL**	10	23	61,5	28	10
9	30	**30K13V-90-PL**	**30K13-90-PL**	13	23	61,5	28	10
15	50		**50K19-90-PL**	19	32	87	38	5

45° Coupling

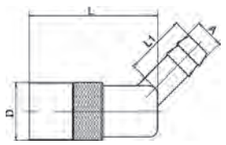

DN	Series			A	D	L	L1	
4,5	20	**20K6V/45**	**20K6/45**	6	18	55,5	19	10
6	20	**20K10V/45**	**20K10/45**	10	18	55,5	22	10
7	30	**30K10V/45**	**30K10/45**	10	24	71	22	10
9	30	**30K13V/45**	**30K13/45**	13	24	75	25	10
15	50	**50K19V/45**	**50K19/45**	19	32	77	30	5

Safety Coupling, Type TS, 45°

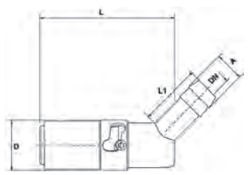

DN	Serie			A	D	L	L1	
6	20	**20K10V/45-TS**	**20K10/45-TS**	10	18	52,5	22	5
7	30	**30K10V/45-TS**	**30K10/45-TS**	10	23	68,5	25	5
9	30	**30K13V/45-TS**	**30K13/45-TS**	13	23	68,5	25	5
15	50	**50K19V/45-TS**	**50K19/45-TS**	19	32	80,8	34	1

Push Lock - 45° Coupling

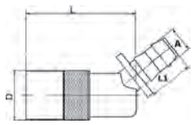

DN	Series			A	D	L	L1	
6	20	**20K10V-45-PL**	**20K10-45-PL**	10	18	40,5	28	10
7	30	**30K10V-45-PL**	**30K10-45-PL**	10	23	61,5	28	10
9	30	**30K13V-45-PL**	**30K13-45-PL**	13	23	61,5	28	10
15	50		**50K19-45-PL**	19	32	87	38	5

Male Threaded Coupling

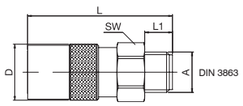

DN	Series			A	D	L	L1	SW	
6	20	**20KUR1/4V**	**20KUR1/4**	G1/4	18	38	9	17	10
6	20	**20KUR3/8V**	**20KUR3/8**	G3/8	18	38	9	19	10
9	30	**30KUR1/4V**	**30KUR1/4**	G1/4	24	48,5	9	22	10
9	30	**30KUR3/8V**	**30KUR3/8**	G3/8	24	48,5	9	22	10
9	30	**30KUR1/2V**	**30KUR1/2**	G1/2	24	51,5	12	22	10
15	50	**50KUR1/2V**	**50KUR1/2**	G1/2	32	73	12	30	10
15	50	**50KUR3/4V**	**50KUR3/4**	G3/4	32	77	16	30	5

See explanation of symbols on page 374

Mould Cooling | Couplers *International Series*

Couplers	**p. 5**	Hose Assembly Tool	p. 51	Push In Fittings	p. 67
Hoses	p. 41	Hose Clamping	p. 52	Manifolds	p. 68
Hose Protection	p. 48	Fittings	p. 54	Sealant & Tape	p. 71
Hose Cutting	p. 50	Valves	p. 61		

Safety Coupling, Type TS, Male Threaded

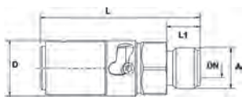

DN	Serie			A	D	L	L1	
6	20	**20KUR1/4V-TS**	**20KUR1/4-TS**	G1/4	18	55,5	11	5
6	20	**20KUR3/8V-TS**	**20KUR3/8-TS**	G3/8	18	55,5	11	5
9	30	**30KUR1/4V-TS**	**30KUR1/4-TS**	G1/4	23	57,5	12,5	5
9	30	**30KUR3/8V-TS**	**30KUR3/8-TS**	G3/8	23	57,5	12,5	5
9	30	**30KUR1/2V-TS**	**30KUR1/2-TS**	G1/2	23	57,5	12,5	5
15	50	**50KUR1/2V-TS**	**50KUR1/2-TS**	G1/2	32	75,8	15	1
15	50	**50KUR3/4V-TS**	**50KUR3/4-TS**	G3/4	32	76,8	16	1

Female Threaded Coupling

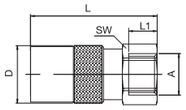

DN	Series			A	D	L	L1	SW	
6	20	**20KIR1/8V**	**20KIR1/8**	G1/8	18	40	10	17	10
6	20	**20KIR1/4V**	**20KIR1/4**	G1/4	18	40	10	17	10
6	20	**20KIR3/8V**	**20KIR3/8**	G3/8	18	44	10	19	10
9	30	**30KIR1/4V**	**30KIR1/4**	G1/4	24	51,5	10	21	10
9	30	**30KIR3/8V**	**30KIR3/8**	G3/8	24	51,5	10	21	10

Banjo Bridge

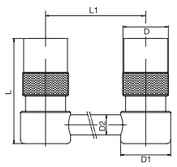

DN	Series		D	L	D1	D2	L1	
6	20	**20K125**	18	42	20	8	125	1
6	20	**20K250**	18	42	20	8	250	1
6	20	**20K500**	18	42	20	8	500	1
9	30	**30K125**	24	58	26	10	125	1
9	30	**30K250**	24	58	26	10	250	1
9	30	**30K500**	24	58	26	10	500	1
15	50	**50K160**	32	78	36	14	160	1
15	50	**50K315**	32	78	36	14	315	1
15	50	**50K500**	32	78	36	14	500	1

Coupling with Plug

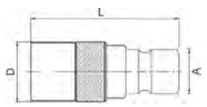

DN	Series			A	D	L	
6	20	**20K30NV**	**20K30N**	13,5	18	50,5	10
9	30	**30K20NV**	**30K20N**	9,4	24	52,5	10

Blind Coupling

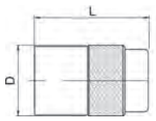

DN	Series		D	L	
6	20	**20K**	18	30	10
9	30	**30K**	24	37	10

See explanation of symbols on page 374

Couplers	**p. 5**	Hose Assembly Tool	p. 51	Push In Fittings	p. 67
Hoses	p. 41	Hose Clamping	p. 52	Manifolds	p. 68
Hose Protection	p. 48	Fittings	p. 54	Sealant & Tape	p. 71
Hose Cutting	p. 50	Valves	p. 61		

Male Plug

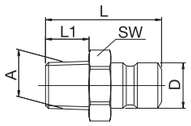

DN	Series			A	D	L	L1	SW	
6	20		**20NM10**	M10x1	9,4	23	8	13	25
6	20		**20NR1/8**	R1/8	9,4	24	9	13	25
6	20		**20NR1/4**	R1/4	9,4	29	12	16	25
6	20	**20NR1/4V**		R1/4	9,4	29	14	16	25
6	20		**20NR3/8**	R3/8	9,4	30	12	19	25
9	30		**30NR1/8**	R1/8	13,5	29,5	20,5	14	25
9	30	**30NR1/4V**	**30NR1/4**	R1/4	13,5	34	12	16	25
9	30	**30NR3/8V**	**30NR3/8**	R3/8	13,5	34	12	19	25
9	30		**30NR1/2**	R1/2	13,5	39	17	24	10
15	50		**50NR1/2**	R1/2	19,8	44	17	22	10
15	50		**50NR3/4**	R3/4	19,8	45	19	29	10

Male Plug - Without Sealant

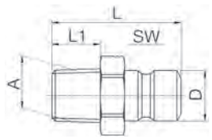

DN	Series		A	D	L	L1	SW	
6	20	**20NRX1/8**	R1/8"	9,4	24	9	11	100
6	20	**20NRX1/4**	R1/4"	9,4	24	12	14	100
9	30	**30NRX1/8**	R1/8"	13,5	29,5	10	14	100
9	30	**30NRX1/4**	R1/4"	13,5	32,5	12	14	100
9	30	**30NRX3/8**	R3/8"	13,5	32,5	12	17	25
9	30	**30NRX1/2**	R1/2"	13,5	37	17	26	25

Male Plug - with Internal Hex

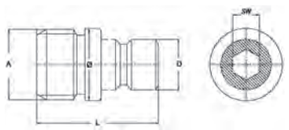

DN	Series		A	D	L	Ø	SW	
6	20	**20NSWR1/8**	G1/8	9,4	20,7	13	5	10
6	20	**20NSWR1/4**	G1/4	9,4	22,7	13,5	5	10
9	30	**30NSWR1/4**	G1/4	13,5	30	15	8	10
9	30	**30NSWR3/8**	G3/8	13,5	30	19	8	10

Adjustable Plug

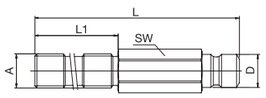

DN	Series		A	D	L	L1	SW	
6	20	**20NR1/8/100**	G1/8	9,4	100	60	11	10
6	20	**20NR1/4/100**	G1/4	9,4	100	60	14	10
9	30	**30NR1/4/100**	G1/4	13,5	100	60	14	10
9	30	**30NR3/8/100**	G3/8	13,5	100	60	17	10

See explanation of symbols on page 374

Mould Cooling | Couplers *International Series*

Couplers	**p. 5**	Hose Assembly Tool	p. 51	Push In Fittings	p. 67
Hoses	p. 41	Hose Clamping	p. 52	Manifolds	p. 68
Hose Protection	p. 48	Fittings	p. 54	Sealant & Tape	p. 71
Hose Cutting	p. 50	Valves	p. 61		

Extended Plug

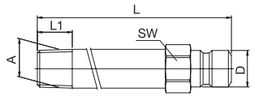

DN	Series		A	D	L	L1	SW	
6	20	**20N50**	R1/8	9,4	50	9	11	10
		20N50-1/4	R1/4	9,4	50	12	14	10
		20N100	R1/8	9,4	100	9	11	10
		20N100-1/4	R1/4	9,4	100	12	14	10
		20N150	R1/8	9,4	150	9	11	10
		20N150-1/4	R1/4	9,4	150	12	14	10
		20N200	R1/8	9,4	200	9	11	10
		20N200-1/4	R1/4	9,4	200	12	14	10
		20N250	R1/8	9,4	250	9	11	10
		20N250-1/4	R1/4	9,4	250	12	14	10
9	30	**30N50**	R1/4	13,5	50	12	15	10
		30N100	R1/4	13,5	100	12	15	10
		30N150	R1/4	13,5	150	12	15	10
		30N200	R1/4	13,5	200	12	15	10
		30N250	R1/4	13,5	250	12	15	10

90° Male Plug

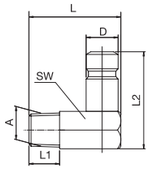

DN	Series		A	D	L	L1	L2	SW	
6	20	**20NM10/90**	M10x1	9,4	27	9	28,5	11	25
6	20	**20NR1/8/90**	R1/8	9,4	27	9	28,5	11	25
6	20	**20NR1/4/90**	R1/4	9,4	27	9	28,5	11	25
9	30	**30NR1/4/90**	R1/4	13,5	34	9	32	15	25
9	30	**30NR3/8/90**	R3/8	13,5	34	9	32	15	25

Push Lock - Hosetail Plug

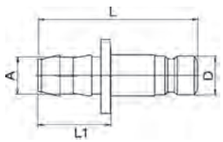

DN	Series		A	D	L	L1	
6	20	**20N10-PL**	10	9,4	44	28	10
7	30	**30N10-PL**	10	13,5	44	28	10
9	30	**30N13-PL**	13	13,5	44	28	10
15	50	**50N19-PL**	19	19,8	65	36	5

See explanation of symbols on page 374

Couplers	**p. 5**	Hose Assembly Tool	p. 51	Push In Fittings	p. 67
Hoses	p. 41	Hose Clamping	p. 52	Manifolds	p. 68
Hose Protection	p. 48	Fittings	p. 54	Sealant & Tape	p. 71
Hose Cutting	p. 50	Valves	p. 61		

Hosetail Plug

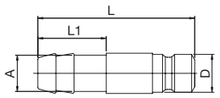

DN	Series	↔	A	D	L	L1	📦
6	20	**20N10**	10	9,4	39	22	25
6	20	**20N13**	13	9,4	39	22	25
7	30	**30N10**	10	13,4	41	25	25
9	30	**30N13**	13	13,4	41	25	25
15	50	**50N19**	19	13,4	41	25	10

Female Plug

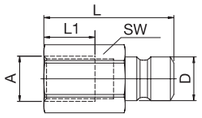

DN	Series	↔	A	D	L	L1	SW	📦
6	20	**20NR1/8I**	G1/8	9,4	28	11	13	25
6	20	**20NR1/4I**	G1/4	9,4	32	13	16	25
6	20	**20NR3/8I**	G3/8	9,4	34	13	19	25
9	30	**30NR1/4I**	G1/4	13,5	37	13	16	25
9	30	**30NR3/8I**	G3/8	13,5	39	13	19	25

Double Plug

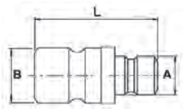

DN	A Series	B Series	↔	L	📦
6	20	20	**2020DB**	31	10
6	20	30	**2030DB**	31	10
9	30	30	**3030DB**	34	10

Replacement Seals FKM

+140 °C | +200 °C

S	Series	Part No.	📦
6	20	**200V**	10
9	30	**300V**	10
16	50	**500V**	10

See explanation of symbols on page 374

Couplers	**p. 5**	Hose Assembly Tool	p. 51	Push In Fittings	p. 67
Hoses	p. 41	Hose Clamping	p. 52	Manifolds	p. 68
Hose Protection	p. 48	Fittings	p. 54	Sealant & Tape	p. 71
Hose Cutting	p. 50	Valves	p. 61		

Nominal Diameter **09 / 13 / 19**

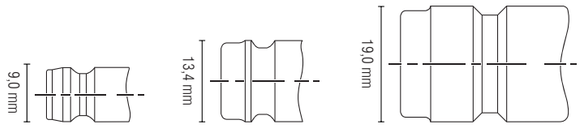

Series 09 **Series 13** **Series 19**

Illustration scale 1:1

Technical Description

Coupling series especially developed for connecting coolant lines on injection moulds.

Fully interchangeable with other brands with the same plug profiles.

All dimensions and tolerances according to original specs.

Chart

Serie 09

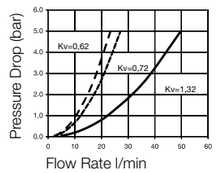

-------- Double valve
- - - - - Single valve
——— Non valved

Serie 13

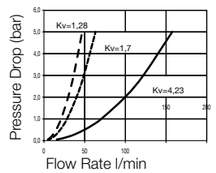

-------- Double valve
- - - - - Single valve
——— Non valved

Serie 20

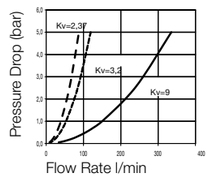

-------- Double valve
- - - - - Single valve
——— Non valved

Material

Coupling		**Plug**	
Back Body	Brass	Plug Profile	Brass
Valve Body	Brass	Back Body	Brass
Sleeve	Brass (with valve)	Valve	Brass
Sleeve	Brass, Nickel Plated (without valve)	Spring	AISI 301
Valve	Brass	Seal	FKM
Locking balls	AISI 420		
Spring	AISI 301		
Seal	FKM		

Working Pressure

15 bar, maximum static working pressure with safety factor of 4 to 1.

Working Temperature

Standard Couplers
Water up to 140°C
Oil up to 180°C

TS Couplers
Water up to 160°C
Oil up to 200°C

Mould Cooling | Couplers *European Series*

Couplers	**p. 5**	Hose Assembly Tool	p. 51	Push In Fittings	p. 67
Hoses	p. 41	Hose Clamping	p. 52	Manifolds	p. 68
Hose Protection	p. 48	Fittings	p. 54	Sealant & Tape	p. 71
Hose Cutting	p. 50	Valves	p. 61		

1

Mould Cooling

Straight Coupling

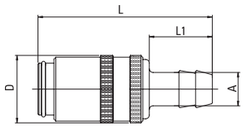

DN	Series			A	D	L	L1	
6	09	**09K10V**	**09K10**	10	18	52	22	10
6	09	**09K13V**	**09K13**	13	18	52	22	10
7	13	**13K10V**	**13K10**	10	23	61,5	25	10
9	13	**13K13V**	**13K13**	13	23	61,5	25	10
13	19	**19K19V**	**19K19**	19	32	90	32	5

Safety Coupling, Type TS, Straight

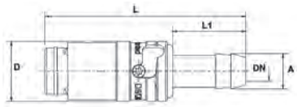

DN	Serie			A	D	L	L1	
6	09	**09K10V-TS**	**09K10-TS**	10	18	59,5	22	5
9	13	**13K13V-TS**	**13K13-TS**	13	23	63	25	5
13	19	**19K19V-TS**	**19K19-TS**	19	32	91	34	5

Push Lock - Straight Coupling

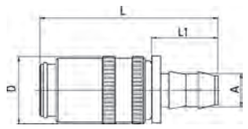

DN	Series			A	D	L	L1	
6	09	**09K10V-PL**	**09K10-PL**	10	18	58,5	28	10
9	13	**13K13V-PL**	**13K13-PL**	13	23	64,5	28	10
13	19		**19K19-PL**	19	32	97	38	5

90° Coupling

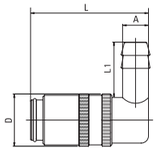

DN	Series			A	D	L	L1	
6	09	**09K10V-90**	**09K10-90**	10	18	41	22	10
7	13	**13K10V-90**	**13K10-90**	10	23	51	28,5	10
9	13	**13K13V-90**	**13K13-90**	13	23	51	28,5	10
13	19	**19K19V-90**	**19K19-90**	19	32	78	32	5

Safety Coupling, Type TS, 90°

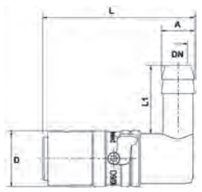

DN	Serie			A	D	L	L1	
6	09	**09K10V/90-TS**	**09K10/90-TS**	10	18	52,5	22	5
9	13	**13K13V/90-TS**	**13K13/90-TS**	13	23	68,5	25	5
13	19	**19K19V/90-TS**	**19K19/90-TS**	19	32	81	34	1

See explanation of symbols on page 374

Couplers	**p. 5**	Hose Assembly Tool	p. 51	Push In Fittings	p. 67
Hoses	p. 41	Hose Clamping	p. 52	Manifolds	p. 68
Hose Protection	p. 48	Fittings	p. 54	Sealant & Tape	p. 71
Hose Cutting	p. 50	Valves	p. 61		

Push Lock - 90° Coupling

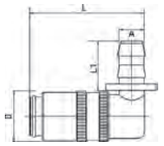

DN	Series			A	D	L	L1	
6	09	**09K10V-90-PL**	**09K10-90-PL**	10	18	42,5	28	10
9	13	**13K13V-90-PL**	**13K13-90-PL**	13	23	51	28	10
13	19		**19K19-90-PL**	19	32	76,5	38	5

45° Coupling

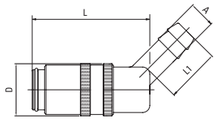

DN	Series			A	D	L	L1	
6	09	09K10V-45	09K10-45	10	18	41	22	10
7	13	13K10V-45	13K10-45	13	23	51	28,5	10
9	13	13K13V-45	13K13-45	13	23	51	28,5	10
13	19	19K19V-45	19K19-45	19	32	78	32	5

Safety Coupling, Type TS, 45°

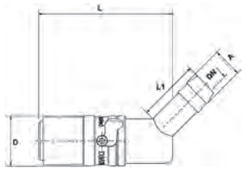

DN	Serie			A	D	L	L1	
6	09	**09K10V/45-TS**	**09K10/45-TS**	10	18	52,5	22	5
9	13	**13K13V/45-TS**	**13K13/45-TS**	13	23	68,5	25	5
13	19	**19K19V/45-TS**	**19K19/45-TS**	19	32	81	34	1

Push Lock - 45° Coupling

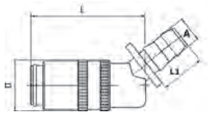

DN	Series			A	D	L	L1	
6	09	**09K10V-45-PL**	**09K10-45-PL**	10	18	42,5	28	10
9	13	**13K13V-45-PL**	**13K13-45-PL**	13	23	51	28	10
13	19		**19K19-45-PL**	19	32	76,5	38	5

Male Threaded Coupling

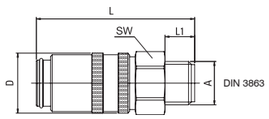

DN	Series			A	D	L	L1	SW	
6	09	**09KUM14V**	**09KUM14**	M14x1,5	18	48	9	17	10
6	09	**09KUR1/4V**	**09KUR1/4**	G1/4	18	48	9	17	10
6	09	**09KUR3/8V**	**09KUR3/8**	G3/8	18	48	9	19	10
9	13	**13KUM16V**	**13KUM16**	M16x1,5	23	51,5	9	22	10
9	13	**13KUR1/4V**	**13KUR1/4**	G1/4	23	51,5	9	22	10
9	13	**13KUR3/8V**	**13KUR3/8**	G3/8	23	51,5	9	22	10
9	13	**13KUR1/2V**	**13KUR1/2**	G1/2	23	54,5	12	22	10
13	19	**19KUR1/2V**	**19KUR1/2**	G1/2	32	74	12	30	5
13	19	**19KUR3/4V**	**19KUR3/4**	G3/4	32	78	16	30	5

See explanation of symbols on page 374

Couplers	**p. 5**	Hose Assembly Tool	p. 51	Push In Fittings	p. 67
Hoses	p. 41	Hose Clamping	p. 52	Manifolds	p. 68
Hose Protection	p. 48	Fittings	p. 54	Sealant & Tape	p. 71
Hose Cutting	p. 50	Valves	p. 61		

Male Threaded Coupling, Short version

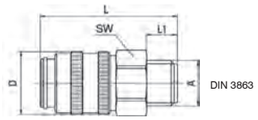

DN	Series		A	D	L	L1	SW	
6	09	09KSR1/4	G 1/4	18	38	9	17	10
9	13	13KSR3/8	G 3/8	24	38	9	22	10

Safety Coupling, Type TS, Male Threaded

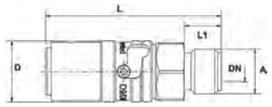

DN	Serie			A	D	L	L1	
6	09	**09KUM14V-TS**	**09KUM14-TS**	M14X1,5	18	55,5	11	5
6	09	**09KUR1/4V-TS**	**09KUR1/4-TS**	G1/4	18	55,5	11	5
6	09	**09KUR3/8V-TS**	**09KUR3/8-TS**	G3/8	18	55,5	11	5
9	13	**13KUM16V-TS**	**13KUM16-TS**	M16X1,5	23	57,5	12,5	5
9	13	**13KUR1/4V-TS**	**13KUR1/4-TS**	G1/4	23	57,5	12,5	5
9	13	**13KUR3/8V-TS**	**13KUR3/8-TS**	G3/8	23	57,5	12,5	5
9	13	**13KUR1/2V-TS**	**13KUR1/2-TS**	G1/2	23	57,5	12,5	5
13	19	**19KUR1/2V-TS**	**19KUR1/2-TS**	G1/2	32	77	16	1
13	19	**19KUR3/4V-TS**	**19KUR3/4-TS**	G3/4	32	77	16	1

Female Threaded Coupling

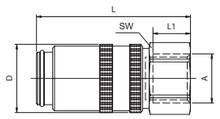

DN	Series			A	D	L	L1	SW	
6	09	**09KIR1/4V**	**09KIR1/4**	G1/4	18	41	10	17	10
6	09	**09KIR3/8V**	**09KIR3/8**	G3/8	18	45	10	19	10
9	13	**13KIR1/4V**	**13KIR1/4**	G1/4	23	46,5	10	21	10
9	13	**13KIR3/8V**	**13KIR3/8**	G3/8	23	46,5	10	21	10
9	13	**13KIM16V**	**13KIM16**	M16x1,5	23	46,5	10	21	10

90° Male Threaded Coupling

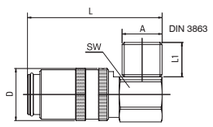

DN	Series			A	D	L	L1	SW	
6	09	**09KM14/90V**	**09KM14/90**	M14x1,5	18	47	12	17	10
6	09	**09KR1/4/90V**	**09KR1/4/90**	G1/4	18	47	12	17	10
9	13	**13KUM16/90V**	**13KM16/90**	M16x1,5	23	53,5	12	22	10

45° Male Threaded Coupling

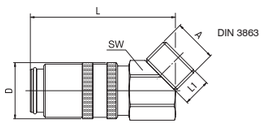

DN	Series			A	D	L	L1	SW	
6	09	**09KM14/45V**	**09KM14/45**	M14x1,5	18	47	9	17	10
6	09	**09KR1/4/45V**	**09KR1/4/45**	G1/4	18	47	9	17	10
9	13	**13KUM16/45V**	**13KUM16/45**	M16x1,5	23	53,5	9	22	10

See explanation of symbols on page 374

Couplers	**p. 5**	Hose Assembly Tool	p. 51	Push In Fittings	p. 67
Hoses	p. 41	Hose Clamping	p. 52	Manifolds	p. 68
Hose Protection	p. 48	Fittings	p. 54	Sealant & Tape	p. 71
Hose Cutting	p. 50	Valves	p. 61		

Banjo Bridge

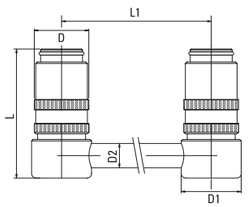

DN	Series	↔	D	L	D1	D2	L1	
6	09	**09K125**	18	43	20	8	125	1
		09K250	18	43	20	8	250	1
		09K500	18	43	20	8	500	1
9	13	**13K125**	23	53	26	10	125	1
		13K250	23	53	26	10	250	1
		13K500	23	53	26	10	500	1
13	19	**19K160**	32	80	36	14	160	1
		19K315	32	80	36	14	315	1
		19K500	32	80	36	14	500	1

Blind Coupling

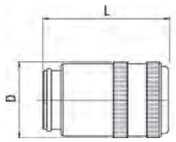

DN	Series	↔	D	L	
6	09	**09K**	18	30	10
9	13	**13K**	24	37	10

Coupling with Plug

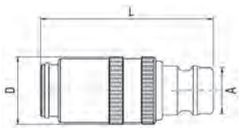

DN	Series	SW	↔	A	D	L	
6	09	**09K13NV**	**09K13N**	13,4	18	45	10
9	13	**13K9NV**	**13K9N**	9,0	23	51	10

Male Plug

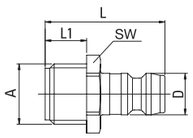

DN	Series	SW	↔	A	D	L	L1	SW	
6	09		**09NM8**	M8x0,75	9	24	7	11	25
			09NM10	M10x1	9	24	7	11	25
			09NR1/8*	G1/8	9	24	7	11	25
			09NM12	M12x1,5	9	27	10	14	25
			09NM14	M14x1,5	9	26	9	15	25
		09NM14V		M14x1,5	9	29	12	15	25
			09NR1/4*	G1/4	9	26	9	15	25
		09NR1/4V*		G1/4	9	29	12	15	25
			09NR3/8*	G3/8	9	30	10	17	25
9	13		**13NR1/8***	G1/8	13,4	25	8	14	25
			13NM14	M14x1,5	13,4	26	9	15	25
			13NR1/4*	G1/4	13,4	26	9	15	25
		13NR1/4V*		G1/4	13,4	31	12	15	25
			13NR3/8*	G3/8	13,4	26	9	17	25
		13NR3/8V*		G3/8	13,4	30	12	17	25
			13NM16	M16x1,5	13,4	26	9	17	25
		13NM16V		M16x1,5	13,4	30	12	17	25
13	19	**19NM24V**	**19NM24**	M24x1,5	19	51	16	27	10
		19NR1/2V*	**19NR1/2***	G1/2	19	47	12	22	10
		19NR3/4V*	**19NR3/4***	G3/4	19	51	16	27	10

* Nickel Plated

See explanation of symbols on page 374

Couplers	**p. 5**	Hose Assembly Tool	p. 51	Push In Fittings	p. 67
Hoses	p. 41	Hose Clamping	p. 52	Manifolds	p. 68
Hose Protection	p. 48	Fittings	p. 54	Sealant & Tape	p. 71
Hose Cutting	p. 50	Valves	p. 61		

Male Plug - Without Sealant

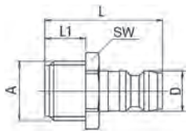

DN	Series	↔	A	D	L	L1	SW	
6	09	09NRX1/8	R1/8"	9	24	7	11	100
6	09	09NRX1/4	R1/4"	9	24	9	14	100
9	13	13NRX1/8	R1/8"	13,4	29,5	8	14	100
9	13	13NRX1/4	R1/4"	13,4	32,5	9	14	100
9	13	13NRX3/8	R3/8"	13,4	32,5	9	17	25

Male Plug - Stainless Steel

STAINLESS STEEL

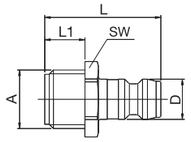

DN	Series	↔	A	D	L	L1	SW	
6	09	**09NM8SS**	M8x0,75	9	24	7	11	25
6	09	**09NM10SS**	M10x1	9	24	7	11	25
6	09	**09NR1/8SS**	G1/8	9	24	7	11	25
6	09	**09NR1/4SS**	G1/4	9	26	9	14	25
9	13	**13NR1/4SS**	G1/4	13,4	26	9	14	25
9	13	**13NR3/8SS**	G3/8	13,4	26	9	17	25

Male Plug - with Internal Hex

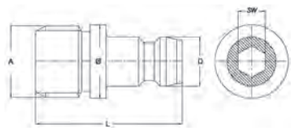

DN	Series	↔	A	D	L	Ø	SW	
6	09	**09NSWM8**	M8X0,75	9	24	10	5	10
6	09	**09NSWM10**	M10X1	9	24	13	5	10
6	09	**09NSWR1/8**	G1/8	9	24	13	5	10
6	09	**09NSWM14**	M14X1,5	9	26	14,5	5	10
6	09	**09NSWR1/4**	G1/4	9	27	13,5	5	10
9	13	**13NSWM14**	M14X1,5	13,4	26	14,5	6	10
9	13	**13NSWR1/4**	G1/4	13,4	26	13,5	6	10
9	13	**13NSWR3/8**	G3/8	13,4	26	17	6	10

Adjustable Plug

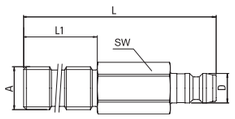

DN	Series	↔	A	D	L	L1	SW	
6	09	**09NR1/8/100**	G1/8	9	100	60	11	10
6	09	**09NR1/4/100**	G1/4	9	100	60	14	10
9	13	**13NR1/4/100**	G1/4	13,4	100	60	14	10
9	13	**13NR3/8/100**	G3/8	13,4	100	60	19	10

See explanation of symbols on page 374

Couplers	**p. 5**	Hose Assembly Tool	p. 51	Push In Fittings	p. 67
Hoses	p. 41	Hose Clamping	p. 52	Manifolds	p. 68
Hose Protection	p. 48	Fittings	p. 54	Sealant & Tape	p. 71
Hose Cutting	p. 50	Valves	p. 61		

Extended Plug

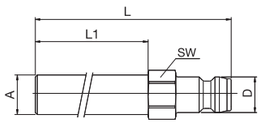

DN	Series	↔	A	D	L	L1	SW	
6	09	**09N63**	8	9	63	42	9	10
6	09	**09N100**	8	9	100	79	9	10
6	09	**09N120**	10	9	120	100	11	10
6	09	**09N240**	10	9	240	220	11	10
6	09	**09N360**	10	9	360	340	11	10
9	13	**13N150**	14	13,4	150	125	15	10
9	13	**13N300**	14	13,4	300	275	15	10
9	13	**13N450**	14	13,4	450	425	15	10
13	19	**19N500**	21	19	500	465	22	5

Extended Plug Threaded

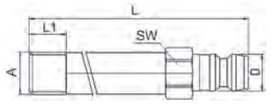

DN	Series	↔	A	D	L	L1	SW	
6	09	**09NM10-60**	M10X1	9	60	9	11	10
		09NM10-100	M10X1	9	100	9	11	10
		09NM10-150	M10X1	9	150	9	11	10
		09NR1/8-60	R1/8	9	60	9	11	10
		09NR1/8-100	R1/8	9	100	9	11	10
		09NR1/8-150	R1/8	9	150	12	14	10
		09NR1/4-60	R1/4	9	60	12	14	10
		09NR1/4-100	R1/4	9	100	12	14	10
		09NR1/4-150	R1/4	9	150	12	14	10
9	13	**13NR1/4-60**	R1/4	13,4	60	12	14	10
		13NR1/4-100	R1/4	13,4	100	12	14	10
		13NR1/4-150	R1/4	13,4	150	12	14	10

90° Male Plug

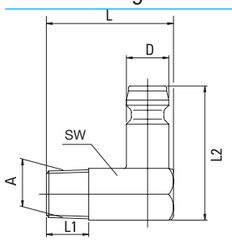

DN	Series	↔	A	D	L	L1	L2	SW	
6	09	**09NM8/90**	M8x0,75	9	27	9	28,5	11	25
6	09	**09NM10/90**	M10x1	9	27	9	28,5	11	25
6	09	**09NR1/8/90***	R1/8	9	27	9	28,5	11	25
6	09	**09NR1/4/90***	R1/4	9	27	9	28,5	11	25
9	13	**13NM14/90**	M14x1,5	13,4	34	11	32	15	25
9	13	**13NR1/4/90***	R1/4	13,4	34	11	32	15	25
9	13	**13NR3/8/90***	R3/8	13,4	34	11	32	15	25
13	19	**19NM24/90**	M24x1,5	19	47	16	54	24	5
13	19	**19NR1/2/90***	R1/2	19	47	16	54	24	5

* Nickel Plated

Hosetail Plug

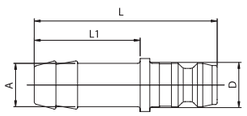

DN	Series	↔	A	D	L	L1	
6	09	**09N10**	10	9	38	22	25
6	09	**09N13**	13	9	38	22	25
9	13	**13N10**	10	13,4	41	25	25
9	13	**13N13**	13	13,4	41	25	25
13	19	**19N13**	13	19	61	32	5
13	19	**19N19**	19	19	61	32	5

See explanation of symbols on page 374

Mould Cooling | Couplers *European Series*

Couplers	**p. 5**	Hose Assembly Tool	p. 51	Push In Fittings	p. 67
Hoses	p. 41	Hose Clamping	p. 52	Manifolds	p. 68
Hose Protection	p. 48	Fittings	p. 54	Sealant & Tape	p. 71
Hose Cutting	p. 50	Valves	p. 61		

Push Lock - Hosetail Plug

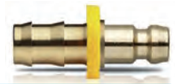

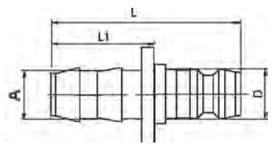

DN	Series	↔	A	D	L	L1	
6	09	**09N10-PL**	10	9	44	28	10
9	13	**13N13-PL**	13	13,4	44	28	10
13	19	**19N19-PL**	19	19	70	36	5

Female Plug

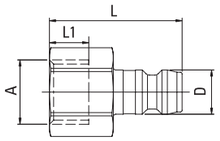

DN	Series	↔	A	D	L	L1	SW	
6	09	**09NR1/8I**	G1/8	9	24	7	11	25
6	09	**09NR1/4I**	G1/4	9	24	7	16	25
6	09	**09NR3/8I**	G3/8	9	27	10	19	25
9	13	**13NR1/4I**	G1/4	13,4	33	10	16	25
9	13	**13NR3/8I**	G3/8	13,4	35	10	19	25

* Nickel Plated

Double Plug

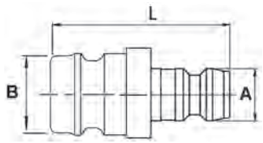

DN	A Series	B Sseries	↔	L	
6	09	09	**0909DB**	34	10
6	09	13	**0913DB**	34	10
9	13	13	**1313DB**	34	10

See explanation of symbols on page 374

Couplers	**p. 5**	Hose Assembly Tool	p. 51	Push In Fittings	p. 67
Hoses	p. 41	Hose Clamping	p. 52	Manifolds	p. 68
Hose Protection	p. 48	Fittings	p. 54	Sealant & Tape	p. 71
Hose Cutting	p. 50	Valves	p. 61		

Nominal Diameter **08 / 12**

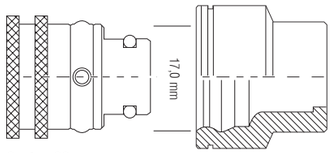

Series 08

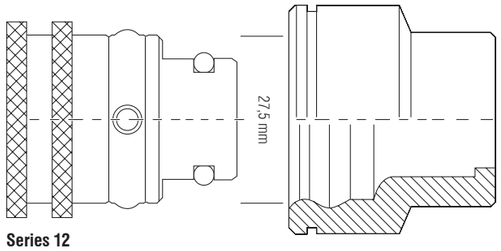

Series 12

Illustration scale 1:1

Technical Description

Coupling series especially developed for connecting coolant lines on injection moulds.

Fully interchangeable with other brands with same plug profiles.

All dimensions and tolerances are made according to original specs.

Material

Coupling

Body	Brass, Nickel Plated
Locking Balls	AISI 420
Spring	AISI 301
Seal	FKM

Plug

Plug	Brass, Nickel Plated

Working Pressure

15 bar, maximum static working pressure with safety factor of 4 to 1.

Working Temperature

Water -15°C up to +140°C
Oil -15°C up to +180°C

Chart

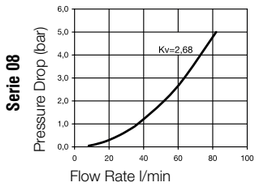

Non valved

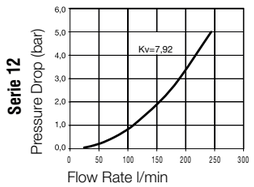

Non valved

Mould Cooling | Couplers *French Series*

Couplers	**p. 5**	Hose Assembly Tool	p. 51	Push In Fittings	p. 67
Hoses	p. 41	Hose Clamping	p. 52	Manifolds	p. 68
Hose Protection	p. 48	Fittings	p. 54	Sealant & Tape	p. 71
Hose Cutting	p. 50	Valves	p. 61		

1

Mould Cooling

Straight Coupling

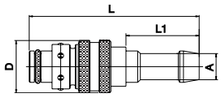

DN	Series	↔	A	D	L	L1	
6	08	**08K8**	8	20	65	28	10
8	08	**08K10**	10	20	65	28	10
8	08	**08K12**	13	20	65	28	10
9	12	**12K13**	13	28	77	33	10
12	12	**12K16**	16	28	77	33	5

Straight Coupling - Push Lock

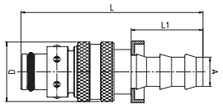

DN	Series	↔	A	D	L	L1	
8	08	**08K10-PL**	10	20	61,5	24,5	10
8	08	**08K12-PL**	13	20	65	28	10
12	12	**12K13-PL**	13	28	77	33	10

90° Coupling

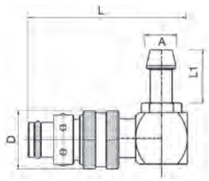

DN	Series	↔	A	D	L	L1	
8	08	**08K10/90**	10	20	51	20	10
8	08	**08K12/90**	13	20	51	20	10
9	12	**12K13/90**	13	28	59	25	5
12	12	**12K16/90**	16	28	62	25	5

90° Coupling - Push Lock

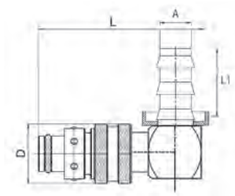

DN	Series	↔	A	D	L	L1	
8	08	**08K10/90-PL**	10	20	51	20	10
		08K12/90-PL	13	20	51	20	10
9	12	**12K13/90-PL**	13	28	59	25	10
12		**12K16/90-PL**	16	28	62	25	10

45° Coupling

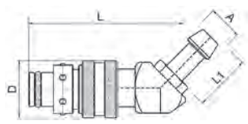

DN	Series	↔	A	D	L	L1	
8	08	**08K10/45**	10	20	51	20	10
8	08	**08K12/45**	13	20	51	20	10
9	12	**12K13/45**	13	28	55	25	5
12	12	**12K16/45**	16	28	55	25	5

See explanation of symbols on page 374

Couplers	**p. 5**	Hose Assembly Tool	p. 51	Push In Fittings	p. 67
Hoses	p. 41	Hose Clamping	p. 52	Manifolds	p. 68
Hose Protection	p. 48	Fittings	p. 54	Sealant & Tape	p. 71
Hose Cutting	p. 50	Valves	p. 61		

45° Coupling - Push Lock

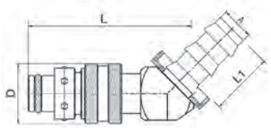

DN	Series	↔	A	D	L	L1	
8	08	**08K10/45-PL**	10	20	51	20	10
8	08	**08K12/45-PL**	13	20	51	20	10
9	12	**12K13/45-PL**	13	28	55	25	5
12	12	**12K16/45-PL**	16	28	55	25	5

Female Threaded Coupling

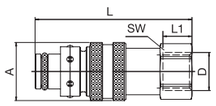

DN	Series	↔	A	D	L	L1	
8	08	**08KIR1/4**	20	G1/4	43	15	10
2	12	**12KIR1/2**	20	G1/2	60	20	10

Male Plug

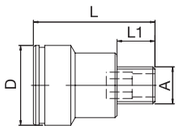

DN	Series	↔	A	D	L	L1	SW	
8	08	**08NM10**	M10x1	21	32	10	6	25
8	08	**08NR1/8**	R 1/8	21	32	10	6	25
8	08	**08NR1/4**	R 1/4	21	33	12	8	25
8	08	**08NR3/8**	R 3/8	21	24	13	8	25
12	12	**12NR3/8**	R 3/8	32	41	13	10	10
12	12	**12NR1/2**	R 1/2	32	44	16	14	10
12	12	**12NR3/4**	R 3/4	32	32	19	14	10

Male Plug - Without Sealant

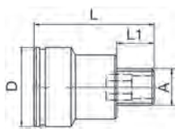

DN	Series	↔	A	D	L	L1	SW	
8	08	**08NRX1/8**	R1/8"	9	32	10	6	100
8	08	**08NRX1/4**	R1/4"	9	33	12	8	100
8	08	**08NRX3/8**	R3/8"	13,4	24	13	8	100
12	12	**12NRX3/8**	R3/8"	13,4	41	13	10	25
12	12	**12NRX1/2**	R1/2"	13,4	44	16	14	25

Female Plug

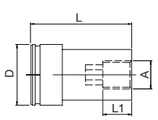

DN	Series	↔	A	D	L	L1	SW	
8	08	**08NR1/8I**	G 1/8	21	35	10	6	10
8	08	**08NR1/4I**	G 1/4	21	40	14	8	10
12	12	**12NR3/8I**	G 3/8	32	49	14	12	10
12	12	**12NR1/2I**	G 1/2	32	50	14	12	10

See explanation of symbols on page 374

Mould Cooling | Couplers *French Series*

1

Mould Cooling

Couplers	**p. 5**	Hose Assembly Tool	p. 51	Push In Fittings	p. 67
Hoses	p. 41	Hose Clamping	p. 52	Manifolds	p. 68
Hose Protection	p. 48	Fittings	p. 54	Sealant & Tape	p. 71
Hose Cutting	p. 50	Valves	p. 61		

90° Plug

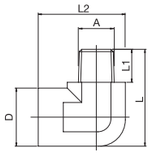

DN	Series	↔	A	D	L	L1	L2	
8	08	**08NR1/8/90**	R 1/8	22	34	11	33	10
8	08	**08NR1/4/90**	R 1/4	22	37	13	33	10
8	08	**08NR3/8/90**	R 3/8	22	37	13	33	10

45° Plug

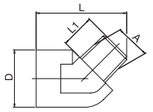

DN	Series	↔	A	D	L	L1	
8	08	**08NR1/8/45**	R 1/8	22	33	10,5	10
8	08	**08NR1/4/45**	R 1/4	22	33	10,5	10

Extended Plug

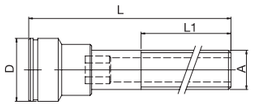

DN	Series	↔	A	D	L	L1	SW	
8	08	**08NR1/8/50**	G 1/8	21	50	28	6	10
		08NR1/8/100	G 1/8	21	100	60	6	10
		08NR1/8/150	G 1/8	21	150	60	6	10
		08NR1/4/50	G 1/4	21	50	28	8	10
		08NR1/4/100	G 1/4	21	100	60	8	10
		08NR1/4/150	G 1/4	21	150	60	8	10
		08NR1/4/200	G 1/4	21	200	60	8	10

Coupling Colour Tags

	Series	Part No.	Colour	
Colour Clip for Couplers	08	**08KR**		10
Colour Clip for Couplers	08	**08KB**		10
Colour Clip for Couplers	08	**08KS**		10
Colour Clip for Couplers	12	**12KR**		10
Colour Clip for Couplers	12	**12KB**		10
Colour Clip for Couplers	12	**12KS**		10

Plug Colour Tags

	Series	Part No.	Colour	
Colour Clip for Connectors	08	**08NR**		10
Colour Clip for Connectors	08	**08NB**		10
Colour Clip for Connectors	08	**08NS**		10
Colour Clip for Connectors	12	**12NR**		10
Colour Clip for Connectors	12	**12NB**		10
Colour Clip for Connectors	12	**12NS**		10

Replacement Seals FKM +200°C

Part No.	Series	S	
08V	08	8	10
12V	12	12	10

Couplers	**p. 5**	Hose Assembly Tool	p. 51	Push In Fittings	p. 67
Hoses	p. 41	Hose Clamping	p. 52	Manifolds	p. 68
Hose Protection	p. 48	Fittings	p. 54	Sealant & Tape	p. 71
Hose Cutting	p. 50	Valves	p. 61		

Nominal Diameter **6 / 9 / 12 / 16 / 25**

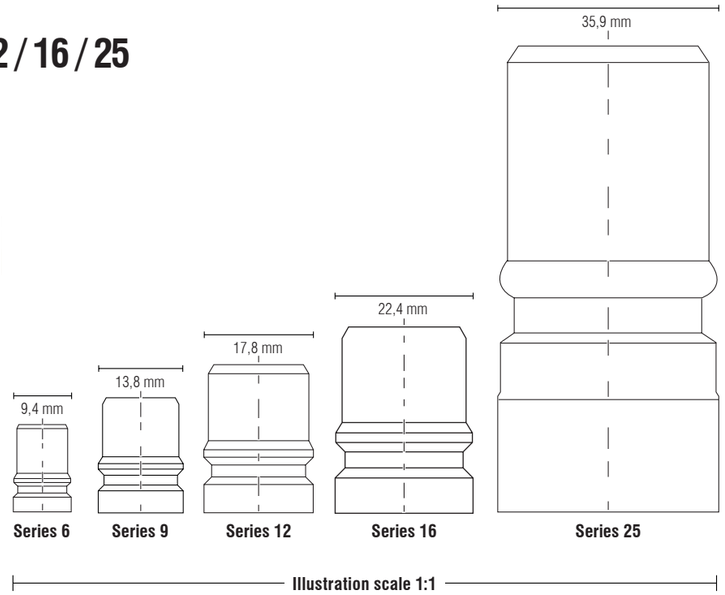

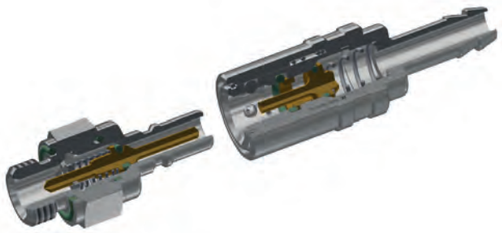

Chart

Single Shut-Off

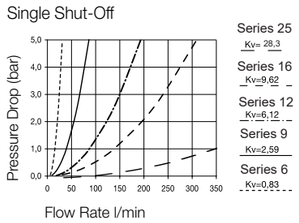

Double Shut-Off

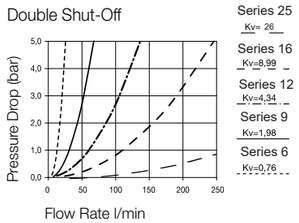

Technical Description

Coupling series especially developed for connecting coolant lines on injection moulds.

Fully interchangeable with other brands with same plug profiles.

All dimensions and tolerances are made according to original specs.

Material

Coupling		
Body	Brass, Nickel Plated	
Locking Balls	AISI 420	
Spring	AISI 301	
Seal	FKM	
Plug	**Series 6/9/12**	**Series 16/25**
Plug Profile	Brass, Nickel Plated	Steel, Zinc Plated
Back Body	Brass, Nickel Plated	Brass, Nickel Plated
Valve	Brass	Brass
Spring	AISI 301	AISI 301
Seal	FKM	FKM

Working Pressure

15 bar, maximum static working pressure with safety factor of 4 to 1.

Working Temperature

Water -15°C up to +140°C
Oil -15°C up to +180°C

Mould Cooling | Couplers *French Matic Series*

Couplers	**p. 5**	Hose Assembly Tool	p. 51	Push In Fittings	p. 67
Hoses	p. 41	Hose Clamping	p. 52	Manifolds	p. 68
Hose Protection	p. 48	Fittings	p. 54	Sealant & Tape	p. 71
Hose Cutting	p. 50	Valves	p. 61		

1

Mould Cooling

Straight Coupling

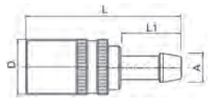

DN	Series		A	D	L	L1	
6	6	**F6K8V**	8	20	58	22	10
9	9	**F9K12V**	12	24	71	25	10
12	12	**F12K16V**	16	32	90,5	32	10
16	16	**F16K19V**	19	38	112,5	36	5

Male Threaded Coupling

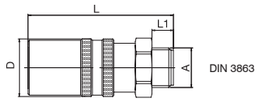

DN	Series		A	D	L	L1	
6	6	**F6KUR1/4V**	G 1/4	20	54	9	10
9	9	**F9KUR3/8V**	G 3/8	24	61,0	9	10
12	12	**F12KUR1/2V**	G 1/2	32	74,5	12	10
16	16	**F16KUR3/4V**	G 3/4	38	90,5	17	5
25	25	**F25KUR1/1V**	G 1	60	142	19	1
25	25	**F25KUR1-1/4V**	G 1-1/4	60	144	22	1

90° Coupling

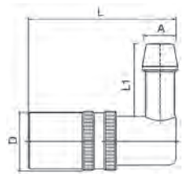

DN	Series		A	D	L	L1	
6	6	**F6K8V/90**	8	20	60,5	22	10
9	9	**F9K10V/90**	10	24	60,5	22	10
9	9	**F9K12V/90**	12	24	60,5	28,5	10

Female Threaded Coupling

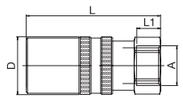

DN	Series		A	D	L	L1	
6	6	**F6KIR1/4V**	G 1/4	20	45	10	10
9	9	**F9KIR3/8V**	G 3/8	24	53	10	10
12	12	**F12KIR1/2V**	G 1/2	32	67	12	10
16	16	**F16KIR3/4V**	G 3/4	38	90	20	5
25	25	**F25KIR1/1V**	G 1	60	140	21	1
25	25	**F25KIR1-1/4V**	G 1.1/4	60	140	21	1

See explanation of symbols on page 374

Couplers	**p. 5**	Hose Assembly Tool	p. 51	Push In Fittings	p. 67
Hoses	p. 41	Hose Clamping	p. 52	Manifolds	p. 68
Hose Protection	p. 48	Fittings	p. 54	Sealant & Tape	p. 71
Hose Cutting	p. 50	Valves	p. 61		

Valved Plug

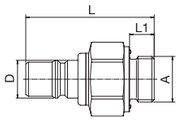

DN	Series		A	D	L	L1	HEX	
6	6	**F6NR1/8V**	G 1/8	9,4	45	7	17	10
9	9	**F9NR1/4V**	G 1/4	13,8	45	9	19	10
9	9	**F9NR3/8V**	G 3/8	13,8	48	12	24	10
12	9	**F9NR1/2V**	G 1/2	13,8	50	12	27	10
12	12	**F12NR3/8V**	G 3/8	17,8	60	9	24	10
12	12	**F12NR1/2V**	G 1/2	17,8	62	12	27	10
12	12	**F12NR3/4V**	G 3/4	17,8	64	16	32	10
16	16	**F16NR3/4V**	G 3/4	22,4	78	16	34	5
16	16	**F16NR1/1V**	G 1	22,4	81	19	41	5
25	25	**F25NR1/1V**	G 1	36	149,5	19	50	1
25	25	**F25NR1-1/4V**	G 1 1/4	36	152,5	22	50	1

Valved Plug Taper Thread

Tapered Thread BSPT

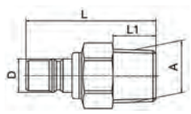

DN	Series		A	D	L	L1	HEX	
6	6	**F6NT1/8V**	1/8	9,4	45,8	10	17	10
6	6	**F6NT1/4V**	1/4	9,4	44,8	12	17	10
9	9	**F9NT1/4V**	1/4	13,8	48,5	12	19	10
9	9	**F9NT3/8V**	3/8	13,8	47	12	19	10
12	12	**F12NT3/8V**	3/8	17,8	63	13	24	10
12	12	**F12NT1/2V**	1/2	17,8	64,5	17	24	10
16	16	**F16NT3/4V**	3/4	22,4	83	21	32	5

Male Plug with Inner Hex

Tapered Thread BSPT

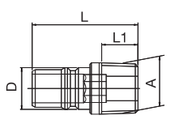

DN	Series		A	D	L	L1	HEX	
6	6	**F6NR1/8**	R 1/8	10	30	9	5	10
9	9	**F9NR1/4**	R 1/4	13,8	35	12	8	10
9	9	**F9NR3/8**	R 3/8	13,8	35	12	8	10
12	12	**F12NR3/8**	R 3/8	17,8	40	12	10	10

Male Plug Taper Thread

Tapered Thread BSPT

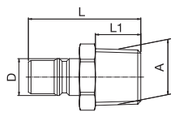

DN	Series		A	D	L	L1	HEX	
12	12	**F12NR1/2**	R 1/2	17,8	42	17	22	10
16	16	**F16NR3/4**	R 3/4	22,4	59	19	27	10

See explanation of symbols on page 374

Mould Cooling | Couplers *French Matic Series*

Couplers	**p. 5**	Hose Assembly Tool	p. 51	Push In Fittings	p. 67
Hoses	p. 41	Hose Clamping	p. 52	Manifolds	p. 68
Hose Protection	p. 48	Fittings	p. 54	Sealant & Tape	p. 71
Hose Cutting	p. 50	Valves	p. 61		

Valved Plug Short Model

Tapered Thread BSPT

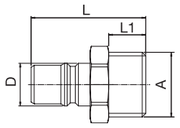

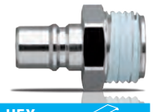

DN	Series		A	D	L	L1	HEX	
9	9	**F9NR1/2V-S**	R 1/2	13,8	37	12	22	10
12	12	**F12NR3/4V-S**	R 3/4	17,8	46	16	27	10

Male Plug

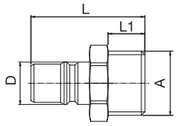

DN	Series		A	D	L	L1	HEX	
9	9	**F9NR1/2**	G 1/2	13,8	37	12	22	10
12	12	**F12NR3/4**	G 3/4	17,8	46	16	27	10

Female Plug

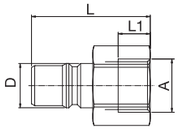

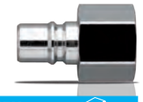

DN	Series		A	D	L	L1	HEX	
6	6	**F6NR1/4I**	G 1/4	9,4	34	11	17	10
9	9	**F9NR3/8I**	G 3/8	13,8	37	10	22	10
12	12	**F12NR1/2I**	G 1/2	17,8	45	12	27	10
25	25	**F25NR1/1I**	G 1	36	100	20	41	1

Female Plug Valved

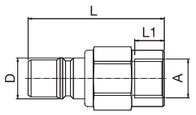

DN	Series		A	D	L	L1	HEX	
9	9	**F9NR1/4VI**	G 1/4	13,8	46	10	19	10
9	9	**F9NR3/8VI**	G 3/8	13,8	48	10	22	10
16	16	**F16NR3/4VI**	G 3/4	22,4	80,5	16	32	5
25	25	**F25NR1/1VI**	G 1	36	148,5	20	50	1
25	25	**F25NR1-1/4VI**	G 1-1/4	36	158	20	50	1

See explanation of symbols on page 374

Couplers	**p. 5**	Hose Assembly Tool	p. 51	Push In Fittings	p. 67
Hoses	p. 41	Hose Clamping	p. 52	Manifolds	p. 68
Hose Protection	p. 48	Fittings	p. 54	Sealant & Tape	p. 71
Hose Cutting	p. 50	Valves	p. 61		

BBI Couplings Series

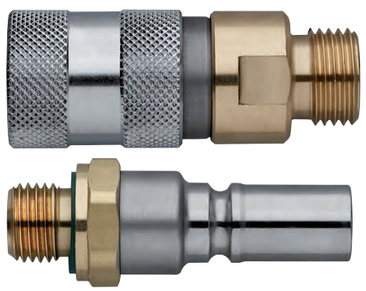

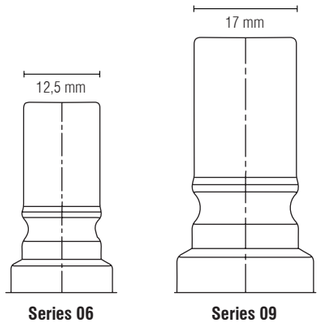

Chart

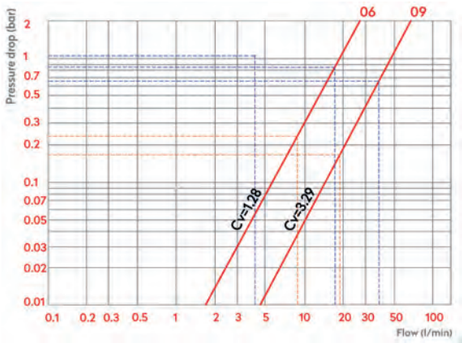

Technical Description

Flat face couplings for cooling circuits prevents air and contaminant ingress during single-handed connection. Optimized flow with low pressure losses.

Material

Female Coupler:
Nickel-plated brass/stainless Steel

Male Tip:
Nickel-plated brass/stainless Steel

Seals:
FKM

Working Pressure

Working Pressure: 60 bars.

Working Temperature

-15°C to +200°C

Mould Cooling | Couplers *BBI Coupling Series*

Couplers	**p. 5**	Hose Assembly Tool	p. 51	Push In Fittings	p. 67
Hoses	p. 41	Hose Clamping	p. 52	Manifolds	p. 68
Hose Protection	p. 48	Fittings	p. 54	Sealant & Tape	p. 71
Hose Cutting	p. 50	Valves	p. 61		

1

Mould Cooling

Female Couplers

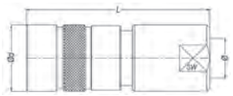

Series		Ø	Ød	L	SW	
6	**BBI061101IAJV**	G 1/4	21,8	60,4	20	1
9	**BBI091102IAJV**	G 3/8	28	75,5	24	1

Male Couplers

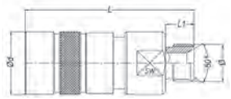

Series		Ø	Ød	L	L1	SW	
6	**BBI061151IAJV**	G 1/4	21,8	59,2	10	20	1
6	**BBI061416IAJV**	M16 X1,5	21,8	58	11	20	1
9	**BBI091152IAJV**	G 3/8	28	77,5	12	24	1

Male Coupler - 90°

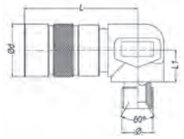

Series		Ø	Ød	L	L1	SW	
6	**BBI061151/IAJVRE**	G 1/4	21,8	47,5	13,15	21,7	1
6	**BBI061416/IAJVRE**	M16 X1,5	21,8	47,5	13,15	21,7	1
9	**BBI091152/IAJVRE**	G 3/8	28	65,2	15,5	26,8	1

Couplers - Hose

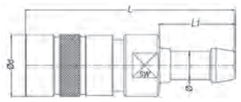

Series		Ø	Ød	L	L1	SW	
6	**BBI061810IAJV**	10 mm.	21,8	73,9	26,5	20	1
9	**BBI091813IAJV**	13 mm.	28	93	27,5	24	1

Couplers - Hose 90°

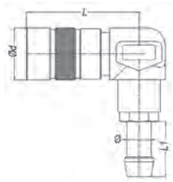

Series		Ø	Ød	L	L1	SW	
6	**BBI061810/IAJVRE**	10 mm.	21,8	47,5	23	21,7	1
9	**BBI091813/IAJVRE**	13 mm.	28	71	27,5	26,8	1

See explanation of symbols on page 374

Couplers	**p. 5**	Hose Assembly Tool	p. 51	Push In Fittings	p. 67
Hoses	p. 41	Hose Clamping	p. 52	Manifolds	p. 68
Hose Protection	p. 48	Fittings	p. 54	Sealant & Tape	p. 71
Hose Cutting	p. 50	Valves	p. 61		

Couplers - Push Lock

Series		Ø	Ød	L	L1	SW	
6	**BBI061810IAJVCN**	10 mm.	21,8	73,4	26	20	1
9	**BBI091813IAJVCN**	13 mm.	28	93,5	28	24	1

Couplers - Hose 90° - Push Lock

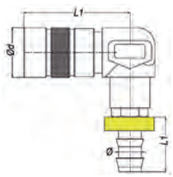

Series		Ø	Ød	L	L1	SW	
6	**BBI061810/IAJVCN**	10 mm.	21,8	47,5	24	21,7	1
9	**BBI091813/IAJVCN**	13 mm.	28	71	28	26,8	1

Nipple Male

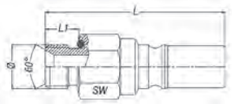

Series		Ø	L	L1	SW	
6	**BBI067151IAJV**	G 1/4	54	10	17	1
6	**BBI067152IAJV**	G 3/8	53	10	21	1
9	**BBI097152AJV**	G 3/8	65	9	23	1

Nipple Female

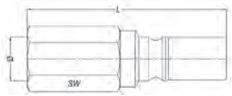

Series		Ø	L	SW	
6	**BBI067101IAJV**	G 1/4	59	17	1
9	**BBI097102IAJV**	G 3/8	71	23	1

See explanation of symbols on page 374

Couplers	**p. 5**	Hose Assembly Tool	p. 51	Push In Fittings	p. 67
Hoses	p. 41	Hose Clamping	p. 52	Manifolds	p. 68
Hose Protection	p. 48	Fittings	p. 54	Sealant & Tape	p. 71
Hose Cutting	p. 50	Valves	p. 61		

Nominal Diameter **75 / 85 / 95 / 105**

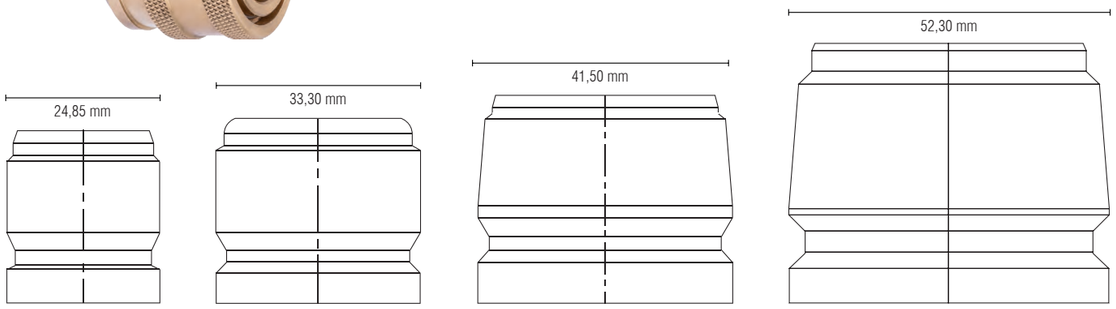

Illustration scale 1:1

Series	Nominal Diameter (DN)
75	18,0 mm
85	23,8 mm
95	30,3 mm.
105	36,5 mm.

DN

Technical Description

Coupling series especially developed for connecting feed lines on Manifolds.

Temperature control units or chiller cooling lines.

The Couplings offer maximum flow capacity.

Material

Coupling	
Back Body	Brass
Valve Body	Brass
Sleeve	Brass
Locking Balls	AISI 420
Spring	AISI 301
Seal	FKM

Plug
Brass

Working Pressure

15 bar, maximum static working pressure with safety factor of 4 to 1.

Working Temperature

Water -15°C up to +140°C
Oil -15°C up to +180°C

Mould Cooling | Couplers *Large Flow Couplings*

Couplers	**p. 5**	Hose Assembly Tool	p. 51	Push In Fittings	p. 67
Hoses	p. 41	Hose Clamping	p. 52	Manifolds	p. 68
Hose Protection	p. 48	Fittings	p. 54	Sealant & Tape	p. 71
Hose Cutting	p. 50	Valves	p. 61		

1

Mould Cooling

Straight Coupling

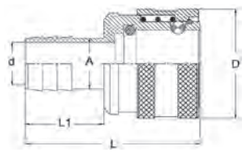

DN	Series	Part No.	A	D	d	L	L1	
18	75	**75K19**	19	41	16	60	27	1
23,8	85	**85K25**	25	50	21,5	82	41,5	1
30,3	95	**95K32**	32	64	28	62	39	1
36,5	105	**105K38**	38	79	34	104	46	1

Male Threaded Coupling

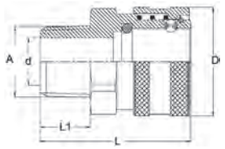

DN	Series	Part No.	A	D	L	L1	d	
18	75	**75KUR3/4**	R 3/4"	41	57	19	18	1
23,8	85	**85KUR1/1**	R 1"	50	65,5	25	24,5	1
30,3	95	**95KUR1-1/4**	R 1-1/4"	64	76,4	24	31,8	1
36,5	105	**105KUR 1-1/2**	R 1-1/2"	79	88,8	25	36,5	1

Female Threaded Coupling

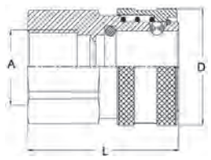

DN	Series	Part No.	A	D	L	
18	75	**75KIR3/4**	G 3/4"	41	53,3	1
23,8	85	**85KIR1/1**	G 1"	50	60	1
30,3	95	**95KIR1-1/4**	G 1-1/4"	64	62	1
36,5	105	**105KIR1-1/2**	G 1-1/2"	79	74	1

Male Plug

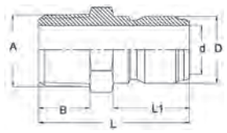

DN	Series	Part No.	A	D	L	L1	d	
18	75	**75NR3/4**	R 3/4"	24,85	56	19	18	1
23,8	85	**85NR1/1**	R 1"	33,3	63,6	14,4	23,8	1
30,3	95	**95NR1-1/4**	R 1-1/4"	41,5	71	24,5	30,3	1
36,5	105	**105NR1-1/2**	R 1-1/2"	52,3	84	25	36,5	1

See explanation of symbols on page 374

Couplers	**p. 5**	Hose Assembly Tool	p. 51	Push In Fittings	p. 67
Hoses	p. 41	Hose Clamping	p. 52	Manifolds	p. 68
Hose Protection	p. 48	Fittings	p. 54	Sealant & Tape	p. 71
Hose Cutting	p. 50	Valves	p. 61		

Female Plug

DN	Series	Part No.	A	D	L	d	
18	75	**75NR3/4I**	G 3/4"	24,85	49	18	1
23,8	85	**85NR1/1I**	G 1"	33,3	59,5	23,8	1
30,3	95	**95NR1-1/4I**	G 1-1/4"	41,5	61,9	30,3	1
36,5	105	**105NR1-1/2I**	G 1-1/2"	52,3	67	36,5	1

Hosetail Plug

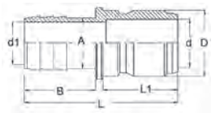

DN	Series	Part No.	A	D	L	d1	d	
18	75	**75N19**	19	24,85	49	16	18	1
23,8	85	**85N25**	25	33,3	59,5	21,5	23,8	1
30,3	95	**95N32**	32	41,5	61,9	28	30,3	1
36,5	105	**105N38**	38	52,3	99	34	36,5	1

See explanation of symbols on page 374

Couplers	**p. 5**	Hose Assembly Tool	p. 51	Push In Fittings	p. 67
Hoses	p. 41	Hose Clamping	p. 52	Manifolds	p. 68
Hose Protection	p. 48	Fittings	p. 54	Sealant & Tape	p. 71
Hose Cutting	p. 50	Valves	p. 61		

Quick and safe mould changes with our Multi Couplings

Moulds with many cooling connections can be time consuming and may lead to incorrect connections. With our Multi Couplings you can connect all connection in one single operation and eliminate any incorrect connections.

Coupling Plate (Machine Side)

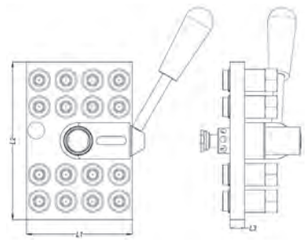

Part No.	# Circuits	# Connections	L1	L2	L3	
MC4	4	8	102	104	14	1
MC6	6	12	154	78	14	1
MC8	8	16	154	104	14	1
MC10	10	20	206	104	14	1
MC12	12	24	240	104	14	1

Supplied without couplings (order separately).

Coupling Plate (Machine Side) French Matic Series 9

Connection	Part No.	Part No.	Part No.
Ø 10	**MC-C10**	**MC-C10P**	
Ø 13	**MC-C13**	**MC-C13P**	
G3/8"			**MC-C3/8**

Locking rings inlcuded.
Couplers are with shut off valves and 9 mm. flow capacity.

See explanation of symbols on page 374

Couplers	**p. 5**	Hose Assembly Tool	p. 51	Push In Fittings	p. 67
Hoses	p. 41	Hose Clamping	p. 52	Manifolds	p. 68
Hose Protection	p. 48	Fittings	p. 54	Sealant & Tape	p. 71
Hose Cutting	p. 50	Valves	p. 61		

Coupling Plate - with Inlet and Outlet Female Manifold

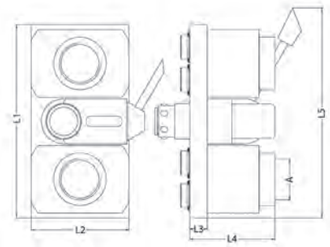

Part No.	# Circuits	# Connection	A	L1	L2	L3	
MC6-1	6	12	G 1"	154	78	14	1
MC10-1-1/4	10	20	G 1-1/4"	206	103	14	1
MC12-1-1/4	12	24	G 1-1/4"	230	103	14	1

Coupling Plate (Mould Side)

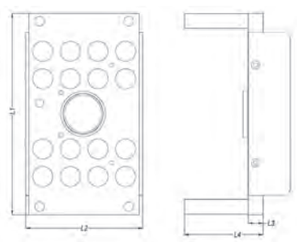

Part No.	# Circuits	# Connections	L1	L2	L3	L4	
MM4-P	4	8	140	104	14	60	1
MM6-P	6	12	190	88	14	60	1
MM8-P	8	16	190	110	14	60	1
MM10-P	10	20	206	110	14	90	1
MM12-P	12	24	256	110	14	90	1

Supplied without Nipples.

Nipples for Coupling Plate (Mould Side) French Matic Series 9

Connection	Part No.	Part No.	Part No.	Part No.
Ø 10			**NC-C10**	**NC-C10P**
Ø 13			**NC-C13**	**NC-C13P**
G3/8"	**NC-C3/8V**	**NC-C3/8**		

Locking rings inlcuded.
Nipples are with size 9 mm. flow capacity.

See explanation of symbols on page 374

Couplers	p. 5	Hose Assembly Tool	p. 51	Push In Fittings	p. 67
Hoses	**p. 41**	Hose Clamping	p. 52	Manifolds	p. 68
Hose Protection	p. 48	Fittings	p. 54	Sealant & Tape	p. 71
Hose Cutting	p. 50	Valves	p. 61		

Hose Selection Guide

Our Hoses are specially engineered for Mould Cooling applications. We offer a wide range of hoses suitable to match any need for the perfect cooling circuit.

Our hoses are available in most common sizes and in 3 main colours to create logic circuits easy to identify cold and warm transfer connections.

We recommend using Stainless steel crimp ferules which allow you to make profesional and safe assemblies.

If you require certified hose assemblies then visit our online configurator at **www.hoseconfigurator.net**.

Type	Water	Oil	Working Temperature	Wear Resistance	Chemical Resistance	Pressure Resistance	Flexibility
PVC	✓✓✓	✓	60°C	✓✓	✓✓	✓✓	✓
G - EPDM	✓✓✓	✓	100°C	✓	✓	✓✓	✓✓
NBR	✓	✓✓✓	135°C	✓✓	✓✓✓	✓✓✓	✓✓
Push On	✓✓✓	✓	140°C	✓✓✓	✓✓	✓✓	✓✓
E - EPDM	✓✓✓	✓	140°C	✓	✓	✓✓	✓✓
Silicone + SS	✓✓	✓	170°C	✓✓✓	✓	✓✓	✓✓✓
FKM + SS	✓	✓✓✓	200°C	✓✓✓	✓✓✓	✓✓	✓✓
PTFE + SS	✓✓✓	✓✓✓	260°C	✓✓✓	✓✓✓	✓✓✓	✓✓✓

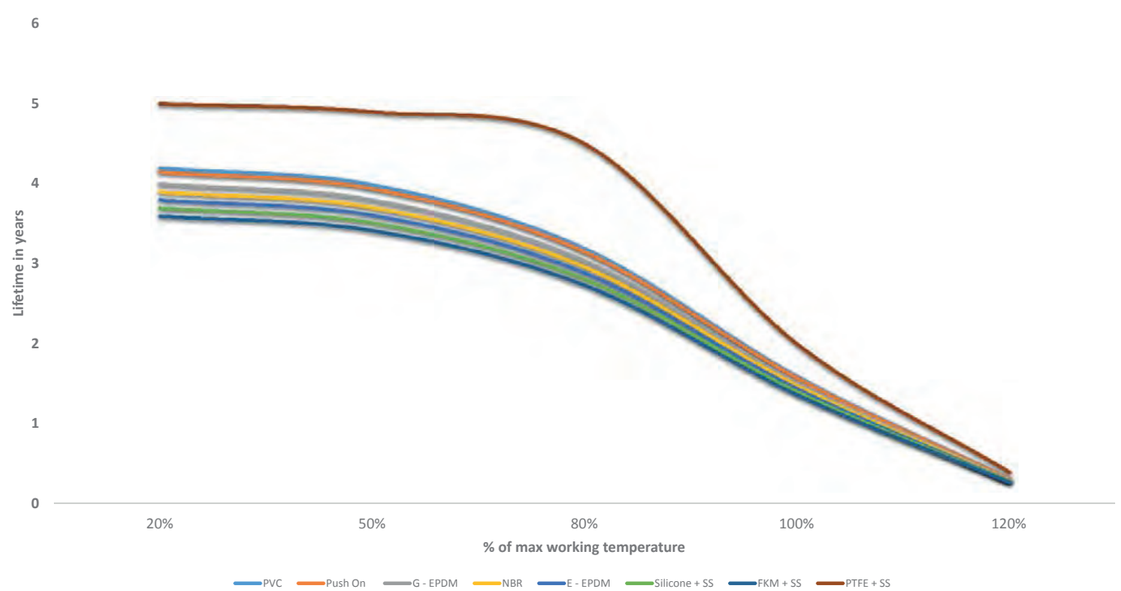

Above figures are only theoritical data, the physical properties are influenced by several factors such as: Pressure, ambient temperatures, wear, additives, sunlight, movement action, bending radius, connection clamping etc. So an individual calculation of lifetime must be based on all variables.

Couplers	p. 5	Hose Assembly Tool	p. 51	Push In Fittings	p. 67
Hoses	**p. 41**	Hose Clamping	p. 52	Manifolds	p. 68
Hose Protection	p. 48	Fittings	p. 54	Sealant & Tape	p. 71
Hose Cutting	p. 50	Valves	p. 61		

Material EPDM

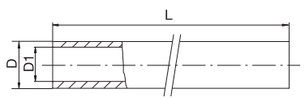

Part No.	D1	D	L (m)	Colour	Working Pressure (Bar)	Burst Pressure (Bar)	Bend Radius	
E10B	10	16,5	50		15	60	60	1
E10R	10	16,5	50		15	60	60	1
E10S	10	16,5	50		15	60	60	1
E13B	13	21	50		15	60	90	1
E13R	13	21	50		15	60	90	1
E13S	13	21	50		15	60	90	1
E19B	19	27	30		15	60	110	1
E19R	19	27	30		15	60	110	1
E19S	19	27	30		15	60	110	1

Tube:
Black, antistatic, smooth EPM Nitrosamine free rubber compound, resistan t to heat, hot water and water Vapour.

Reinforcement:
Synthetic textile yarns.

Cover:
Blue, Red, or Black smooth EPDM Nitrosamine free rubber compound. Resistant to abrasion, ozone, heat, and weather.

Applications:
Flexible hose designed for hot water and water vapour for mould temperature controlling.

Temperature range:
Working temperature: Up to +140°C (+284°F) peak up to +164°C (+327°F).
Note: Lifetime of this hose will be substantially reduced if operating temperatures exceed +130°C (+266°F).

Tolerances:
UNI EN ISO 1307/97 tolerances for inside diameters up to and including 25 mm.

On inside diameter:
for I.D. 5.1 up to 20 mm ± 0.80 mm.
Length tolerance: ± 1%.

Material EPDM

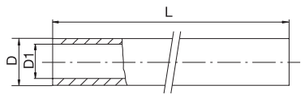

Part No.	D1	D	L (m)	Colour	Working Pressure (Bar)	Burst Pressure (Bar)	Bend Radius	
G10B	10	16,5	50		15	60	60	1
G10R	10	16,5	50		15	60	60	1
G10S	10	16,5	50		15	60	60	1
G13B	13	21	50		15	60	90	1
G13R	13	21	50		15	60	90	1
G13S	13	21	50		15	60	90	1
G19B	19	27	30		15	60	110	1
G19R	19	27	30		15	60	110	1
G19S	19	27	30		15	60	110	1
G25B	25	35	20		15	60	130	1
G25R	25	35	20		15	60	130	1
G38B	38	48	20		10	30	200	1
G38R	38	48	20		10	30	200	1

Tube:
Black, antistatic, smooth EPDM Nitrosamine free rubber compound, resistant to water, hot water, air, light-chemical media.

Reinforcement:
Synthetic textile yarns.

Cover:
Red, Blue or Black smooth EPDM Nitrosamine free rubber compound.

Applications:
Designed for air, cold and hot water, and light-chemical media for mould temperature controlling.

Temperature range:
Working temperature: Up to +100°C (+248°F).

Tolerances:
UNI EN ISO 1307/97 tolerances for inside diameters up to and including 25 mm.

On inside diameter:
for I.D. 5.1 up to 20 mm ± 0.80 mm.
Length tolerance: ± 1%.

See explanation of symbols on page 374

Mould Cooling | Hoses

Couplers	p. 5	Hose Assembly Tool	p. 51	Push In Fittings	p. 67
Hoses	**p. 41**	Hose Clamping	p. 52	Manifolds	p. 68
Hose Protection	p. 48	Fittings	p. 54	Sealant & Tape	p. 71
Hose Cutting	p. 50	Valves	p. 61		

1

Mould Cooling

Material EPDM - Push On Hose

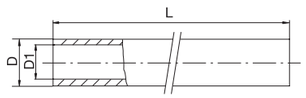

Part No.	D1	D	L (m)	Colour	Working Pressure (Bar)	Burst Pressure (Bar)	Bend Radius	
PL10B-HT	10	16	50		28	112	80	1
PL10R-HT	10	16	50		28	112	80	1
PL13B-HT	13	20	50		28	112	100	1
PL13R-HT	13	20	50		28	112	100	1
PL19B-HT	19	28,50	50		21	84	140	1
PL19R-HT	19	28,50	50		21	84	140	1

Tube:
Black, smooth special rubber for high temperature.
Our Push On fittings are recommended.

Reinforcement:
Hhigh strength synthetic textile braids.

Cover:
Red or blue, abrasion, and weathering resistant.

Surface:
Smooth fabric.

Applications:
Suitable for delivery of air, hot and cold water, and chemical products low with push lock fitting system.

Temperature range:
Up to +140°C (+284°F)

Tolerances:
UNI EN ISO 1307/97 tolerances for inside diameters up to and including 25 mm.

On inside diameter:
For I.D. 5.1 up to 20 mm ± 0.80 mm.
Length tolerance: ± 1%.
Standards: CNOMO E07.21.115.N.

Material NBR

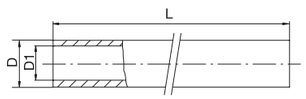

Part No.	D1	D	L (m)	Colour	Working Pressure (Bar)	Burst Pressure (Bar)	Bend Radius	
N10S	10	16,5	50		28	110	75	1
N13S	13	20	50		28	110	100	1

Tube:
Black, antistatic, smooth NBR rubber compound, resistant to Oil.

Reinforcement:
Polyvinyl alcohol (PVA).

Cover:
Black smooth CPE rubber compound.

Applications:
Designed for Oil mould temperature controlling.

Temperature range:
Working temperature: Up to +135°C (+275°F) peak up to +150°C (+302°F).

Tolerances:
UNI EN ISO 1307/97 tolerances for inside diameters up to and including 25 mm.

On inside diameter:
for I.D. 5.1 up to 20 mm ± 0.80 mm.
Length tolerance: ± 1%.

See explanation of symbols on page 374

Couplers	p. 5	Hose Assembly Tool	p. 51	Push In Fittings	p. 67
Hoses	**p. 41**	Hose Clamping	p. 52	Manifolds	p. 68
Hose Protection	p. 48	Fittings	p. 54	Sealant & Tape	p. 71
Hose Cutting	p. 50	Valves	p. 61		

Material PVC

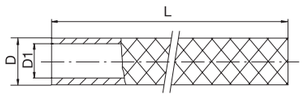

Part No.	D1	D	L (m)	Colour	Working Pressure (Bar)	Burst Pressure (Bar)	Bend Radius	
P10T	10	16	30		17	51	65	1
P10B	10	16	30		17	51	65	1
P10R	10	16	30		17	51	65	1
P13T	13	19	30		15	45	85	1
P13B	13	19	30		15	45	85	1
P13R	13	19	30		15	45	85	1
P19T	19	26	30		10	30	125	1
P19B	19	26	30		10	30	125	1
P19R	19	26	30		10	30	125	1

Tube:
Transparent soft PVC hose for low temperature water and air.

Reinforcement:
High-strength PES fiber.

Cover:
Clear, blue or red transparent soft PVC.
Resistant to abrasion, ozone, and weather.

Applications:
Flexible hose designed for cold water for mould temperature controlling.

Temperature range:
Working temperature: Up to +60°C (+140°F)
peak up to +90°C (+194°F).
Note: Lifetime of this hose will be substantially reduced if operating temperatures exceed +60°C (+140°F).

Tolerances:
UNI EN ISO 1307/97 tolerances for inside diameters up to and including 25 mm.

On inside diameter:
for I.D. 5.1 up to 20 mm ± 0.80 mm.
Length tolerance: ± 1%.

Material Silicone - Steam Resistant

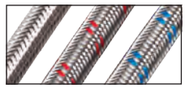

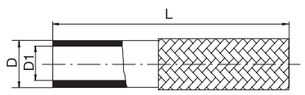

Part No.	D1	D	L (m)	Colour	Working Pressure (Bar)	Burst Pressure (Bar)	Bend Radius	
S10	10	15	25		15	45	40	1
S10B	10	15	25		15	45	40	1
S10R	10	15	25		15	45	40	1
S13	13	19	25		15	45	60	1
S13B	13	19	25		15	45	60	1
S13R	13	19	25		15	45	60	1
S19	19	29	25		15	45	100	1
S19B	19	29	25		15	45	100	1
S19R	19	29	25		15	45	100	1

Tube:
Clear Silicone Shore 60°.

Reinforcement:
Stainless steel overbraid with colour marking made of textile meta aramid.
(high temperature resistant)

Applications:
Designed for water and light chemical media for mould temperature controlling.

Temperature range:
Working temperature: Max +170°C /+338°F.

Tolerances:
DIN 7715.

See explanation of symbols on page 374

Mould Cooling | Hoses

Couplers	p. 5	Hose Assembly Tool	p. 51	Push In Fittings	p. 67
Hoses	**p. 41**	Hose Clamping	p. 52	Manifolds	p. 68
Hose Protection	p. 48	Fittings	p. 54	Sealant & Tape	p. 71
Hose Cutting	p. 50	Valves	p. 61		

Material FKM

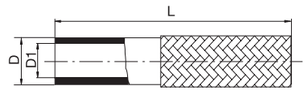

Part No.	D1	D	L (m)	Colour	Working Pressure (Bar)	Burst Pressure (Bar)	Bend Radius	
V10	10	16	25		15	45	50	1
V13	13	19	25		15	45	60	1

Tube:
Black Viton shore 65°.

Reinforcement:
Stainless steel overbraid.

Applications:
Designed for Oil and chemical media for mould temperature controlling.

Temperature range:
Working temperature: Oil Max +200°C (+392°F)
Working temperature: Water Max +140°C (+284°F).

Tolerances:
ISO DIN 3302-1 E2.

See explanation of symbols on page 374

Couplers	p. 5	Hose Assembly Tool	p. 51	Push In Fittings	p. 67
Hoses	**p. 41**	Hose Clamping	p. 52	Manifolds	p. 68
Hose Protection	p. 48	Fittings	p. 54	Sealant & Tape	p. 71
Hose Cutting	p. 50	Valves	p. 61		

High Temperature Water and Oil Hose Assemblies

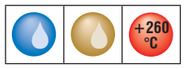

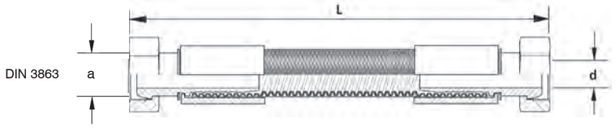

Stainless Steel Braided	Stainless Steel Braided + Red Silicone Jacket	Stainless Steel Braided + Blue Silicone Jacket	A	L	Hose ID (d)	Working Pressure (Bar)	Burst Pressure (Bar)	Bend Radius
T10300R1/4	T10300R1/4-R	T10300R1/4-B	1/4" BSPP	300	10	20	80	22
T10600R1/4	T10600R1/4-R	T10600R1/4-B		600				
T10800R1/4	T10800R1/4-R	T10800R1/4-B		800				
T101000R1/4	T101000R1/4-R	T101000R1/4-B		1000				
T101250R1/4	T101250R1/4-R	T101250R1/4-B		1250				
T101500R1/4	T101500R1/4-R	T101500R1/4-B		1500				
T102000R1/4	T102000R1/4-R	T102000R1/4-B		2000				
T10300M14	T10300M14-R	T10300M14-B	M14x1,5	300	10	20	80	22
T10600M14	T10600M14-R	T10600M14-B		600				
T10800M14	T10800M14-R	T10800M14-B		800				
T101000M14	T101000M14-R	T101000M14-B		1000				
T101250M14	T101250M14-R	T101250M14-B		1250				
T101500M14	T101500M14-R	T101500M14-B		1500				
T102000M14	T102000M14-R	T102000M14-B		2000				
T13300R3/8	T13300R3/8-R	T13300R3/8-B	3/8" BSPP	300	13	20	80	25
T13600R3/8	T13600R3/8-R	T13600R3/8-B		600				
T13800R3/8	T13800R3/8-R	T13800R3/8-B		800				
T131000R3/8	T131000R3/8-R	T131000R3/8-B		1000				
T131250R3/8	T131250R3/8-R	T131250R3/8-B		1250				
T131500R3/8	T131500R3/8-R	T131500R3/8-B		1500				
T132000R3/8	T132000R3/8-R	T132000R3/8-B		2000				

With 60° Cone Seat swivel fittings DIN 3863.

Tube:
Low profile helically convoluted PTFE (polytetrafluorethylene).

Reinforcement:
Stainless steel overbraid (Red/Blue Silicone cover).

Applications:
Designed for Water, Oil and chemical media for mould temperature controlling.

Temperature range:
Working temperature:
Max +260°C (+500°F)
RED/BLUE: Only +200°C (+392°F).

Tolerances:
ISO DIN 3302-1 E2.

See explanation of symbols on page 374

Couplers	p. 5	Hose Assembly Tool	p. 51	Push In Fittings	p. 67
Hoses	p. 41	Hose Clamping	p. 52	Manifolds	p. 68
Hose Protection	**p. 48**	Fittings	p. 54	Sealant & Tape	p. 71
Hose Cutting	p. 50	Valves	p. 61		

Safety Heat Sleeve

Part No.	Colour	ID (mm)	Length
SHS10		10	20 m
SHS10B		10	20 m
SHS15		15	20 m
SHS15B		15	20 m
SHS20		20	20 m
SHS20B		20	20 m
SHS25		25	20 m
SHS25B		25	20 m
SHS30		30	20 m
SHS30B		30	20 m
SHS40		40	20 m
SHS40B		40	20 m

Protect hoses and cables from heat exposure.
Material: Glass fiber with silicone coating.
Temperature: Up to +260°C continuous heat.

Heat Tape

Part No.	Colour	Thickness (mm)	Width (mm)	Roll Length (mm)
HT-B-3	Blue	0,5	25,4	3000
HT-R-3	Red	0,5	25,4	3000

Material: Silicone.
Resists Temps +260°C (+500°F) to -50°C (-60°F).
No Adhesive Therefore No Residue when Removed.
Conforms to Shape to Create an Air and Water Tight Seal.
Stretches up to 300%.

Safety Sleeve

Part No.	ID (mm)	Flat (mm)	Length (roll)
SS17	17	30	50 m.
SS23	23	40	50 m.
SS30	30	50	50 m.
SS39	39	65	50 m.
SS55	55	90	50 m.

Protect in case of burst hose.
Protect hose from abrasion.
Resistant to chemicals.
Polyester up to +140 degrees.

Safe-Strip, Standard

Part No.	Length (mm)	Bundle max (mm)	Strip Width (mm)
STD70	310	70	40
STD100	435	100	40
STD125	505	125	40
STD155	605	155	40
STD180	680	180	40

Safe-Strip made of polypropylene with Velcro fasteners.

See explanation of symbols on page 374

Mould Cooling | Hose Protection

Couplers	p. 5	Hose Assembly Tool	p. 51	Push In Fittings	p. 67
Hoses	p. 41	Hose Clamping	p. 52	Manifolds	p. 68
Hose Protection	**p. 48**	Fittings	p. 54	Sealant & Tape	p. 71
Hose Cutting	p. 50	Valves	p. 61		

1

Mould Cooling

Safe-Strip, with Mounting Eyelet

Part No.	Length (mm)	Bundle max (mm)	Strip Width (mm)
STE70	340	70	40
STE100	455	100	40
STE125	540	125	40
STE155	660	155	40
STE180	765	180	40

Safe-Strip made of polypropylene with Velcro fasteners. With Eyelet.

Safe-Strip with Buckle

Part No.	Length (mm)	Strip Width (mm)
STB50	500	25
STB100	1000	25
STB150	1500	25

Safe-Strip made of polyproylene with quick-release buckle.

Hose Ziptag

Part No.	Type	Colour	Length (mm)	
ZT301R	Plain	Red	300 mm.	10
ZT301B	Plain	Blue	300 mm.	10

Ziptags available in 2 styles:
Plain for individual marking/labelling.

Material: Nylon.
Temperature range: Up to +150°C.

See explanation of symbols on page 374

Couplers	p. 5	Hose Assembly Tool	p. 51	Push In Fittings	p. 67
Hoses	p. 41	Hose Clamping	p. 52	Manifolds	p. 68
Hose Protection	p. 48	Fittings	p. 54	Sealant & Tape	p. 71
Hose Cutting	**p. 50**	Valves	p. 61		

Hose Cutting Tool

Part No.	Size	
HC025	0-25 mm	1

For PVC and Rubber hoses only.

Spare Blades

Part No.	Size	
HC-SB	One Size	1

Hose Cutter

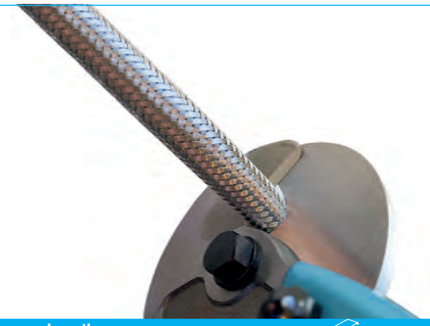

Part No.	Hose size cut	Length	
HC-600	10-13-19 mm	600 mm	1

- For easy and clean cut of stainless steel braided hoses
- Weight: 1700g
- Length: 600mm

See explanation of symbols on page 374

Couplers	p. 5	**Hose Assembly Tool**	**p. 51**	Push In Fittings	p. 67
Hoses	p. 41	Hose Clamping	p. 52	Manifolds	p. 68
Hose Protection	p. 48	Fittings	p. 54	Sealant & Tape	p. 71
Hose Cutting	p. 50	Valves	p. 61		

Base Tool

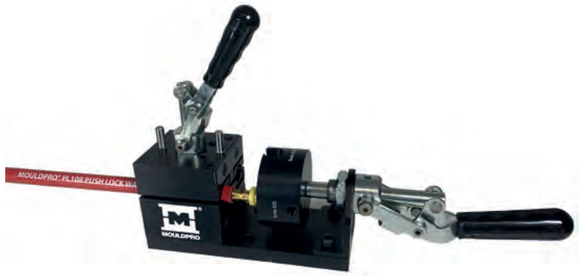

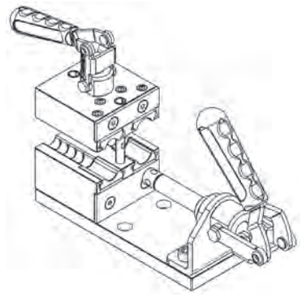

Part No.	Hose range (ID)	Weight KG
HAT-5000	10-13 mm. (3/8" - 1/2")	3,3

Assembly tool ideal for Push-On fittings and standard hose tail couplers, to be perfectly assembled - quick and easy.
Adaptors available for all hosetail fittings and couplers.

Adapters for Hose Assembly Tool

Part No.	Reference	
HAT-01	Series 09/13 European Series 20/30 International	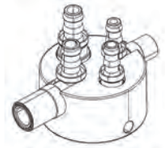
HAT-02	Safety - Ts Series 09/13 European Series 20/30 International	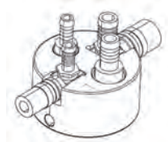
HAT-03	45° Series 09/13 European Series 20/30 International	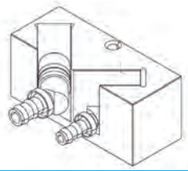
HAT-04	45° Safety - Ts Series 09/13 European Series 20/30 International	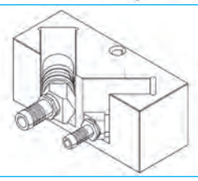

Part No.	Reference	
HAT-05	Series 08/12 French	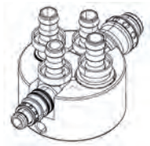
HAT-06	Series Mc.. Multi-Couplers	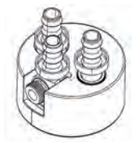
HAT-07	Threaded Hose Nippels G1/8" - G1/4" - G3/8" - M10 - M14	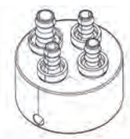
HAT-08	Plain Insert For Custom Recess	

See explanation of symbols on page 374

Couplers	p. 5	Hose Assembly Tool	p. 51	Push In Fittings	p. 67
Hoses	p. 41	**Hose Clamping**	**p. 52**	Manifolds	p. 68
Hose Protection	p. 48	Fittings	p. 54	Sealant & Tape	p. 71
Hose Cutting	p. 50	Valves	p. 61		

Ferrule

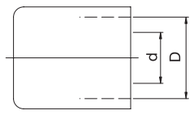

STAINLESS STEEL

Part No.	D	d		Hose Ref.
C10/16	16,9	10	100	S10/V10/P10/N10
C10/17	17,5	10	100	G10/E10
C13/19	19	13	100	P13/S13
C13/20	20	13	100	P13/S13/N13/V13
C13/22	22,5	13	100	G13/E13
C19/29	29	19	100	G19/E19
C19/31*	30,5	19	20	S19

Material: Stainless Steel
* Chrome Plated Steel
Offers perfect and safe connections.

Position Gauge

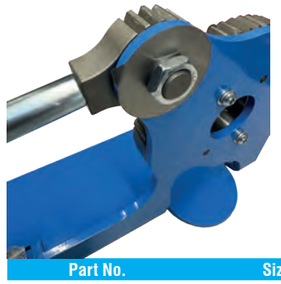

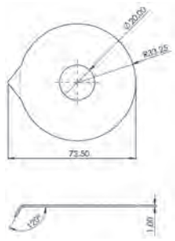

Part No.	Size	
PG-X100	Universal	1

Description
This Position Gauge is ideal to retro-fit on the X100 Hose crimper and will indicate correct crimp position for perfect crimps everytime.
To be used in conection with X100 crimper, Precision Crimp Jaws and Mouldpro Hose Ferrules.

Hand Crimper

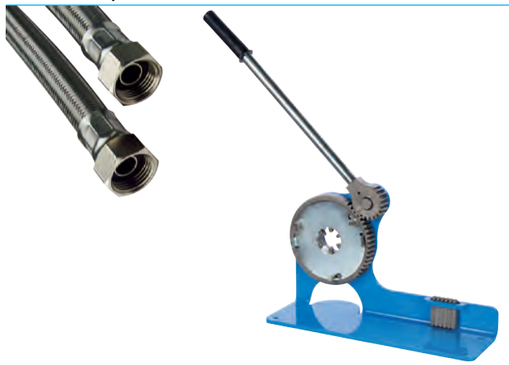

Part No.	Crimp Range (mm)	
X100	10-36	1

Precision Crimp Jaws are purchased separately from the hand crimper.
The precision crimp jaws are only suitable for the newest version of the hand crimper, introduced in 2020.

Precision Crimp Jaws

Part No.	Crimp Diameter (mm)	Ferrule Ref	Hose Ref	
PCJ-16	16	C10/16	S10/V10/P10/N10	1 set
PCJ-17	17	C10/17	G10/E10	1 set
PCJ-20	20	C13/20	S13/V13/P13/N13	1 set
PCJ-22	22	C13/22	E13/G13	1 set

Description
Precision designed to give the perfect crimp everytime.
The Jaws are designed so they close completely around the ferrule without leaving gap for leaks.
Use the Position Gauge in connection with X100 for the perfect result.
Precision Crimp Jaws are purchased separately from the hand crimper.
The precision crimp jaws are only suitable for the newest version of the hand crimper, introduced in 2020.

See explanation of symbols on page 374

Mould Cooling | Clamping

Couplers	p. 5	Hose Assembly Tool	p. 51	Push In Fittings	p. 67
Hoses	p. 41	**Hose Clamping**	**p. 52**	Manifolds	p. 68
Hose Protection	p. 48	Fittings	p. 54	Sealant & Tape	p. 71
Hose Cutting	p. 50	Valves	p. 61		

1

Mould Cooling

Hose Clamps Standard Type

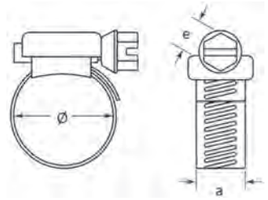

Part No.	Ø	e	a		Hose ref.
K10	11-17	7	9	50	S10/V10/P10/E10/G10/N10
K13	13-20	7	9	50	S13/V13/P13/E13/G13/N13
K19	22-32	7	9	50	S19/P19/E19/G19
K25	32-44	7	9	50	E25/G25

Screw: Electro zinc plated. Band: Galfan/Aluzink. Housing: Painted.

Hose Clamps Heavy Duty

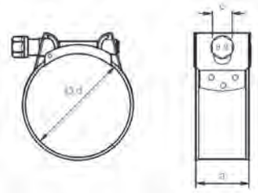

STAINLESS STEEL

Part No.	Ø	e	a		Hose ref.
HDC2527	25-27	8	18	50	P19/E19/G19
HDC3437	34-37	11	20	50	G25
HDC4751	47-51	11	20	50	G38

Material: Stainless Steel.

Flexible Hose Clip Screwdriver

Part No.	A/F
SD01	7

Flexlible screwdriver for hose clips.
7 mm A/F.

Side Pincer

Part No.	Side Pincer	Front Pincer	
PS01	•	•	1

Suitable for Ear Clamps.
Can be used either front or side access.

Two-ear Clip

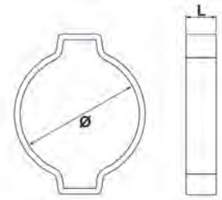

Part No.	ø - ID	L		HOSE Ref
EAR15	13-15	7	100	S10/V10
EAR17	14-17	7	100	P10/N10
EAR18	15-18	7,5	100	E10/G10
EAR20	17-20	7,5	100	S13/V13/P13/N13
EAR23	20-23	8,5	100	E13/G13
EAR27	23-27	8,5	100	P19
EAR28	25-28	9	100	E19/G19

Two-ear clips are an economical solution for simple hose assemblies.
The two ears give the clip extra grip and help to maintain constant pressure around the hose.
Two-ear clips offer great versatility in simple hose assemblies.
Material: St 34 steel : Finish Silver-white Cr3 Zinc-Plated.

Couplers	p. 5	Hose Assembly Tool	p. 51	Push In Fittings	p. 67
Hoses	p. 41	Hose Clamping	p. 52	Manifolds	p. 68
Hose Protection	p. 48	**Fittings**	**p. 54**	Sealant & Tape	p. 71
Hose Cutting	p. 50	Valves	p. 61		

Straight Blade Baffles

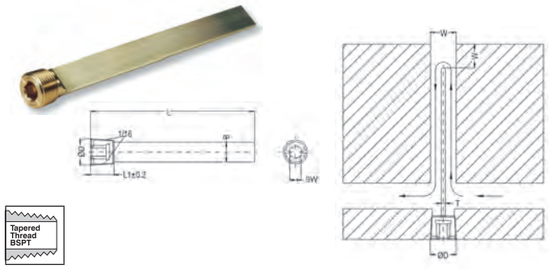

Part No	ØD	SW	W	B	L	L1	T
MB100-1/16	R 1/16"	4	6,5	6,2	104	8	1,61
MB200-1/16	R 1/16"	4	6,5	6,2	204	8	1,61
MB100-1/8	R 1/8"	5	8,5	8,2	104	8	1,61
MB200-1/8	R 1/8"	5	8,5	8,2	204	8	1,61
MB125-1/4	R 1/4"	7	11,5	11,2	131	10	2,43
MB250-1/4	R 1/4"	7	11,5	11,2	258	10	2,43
MB150-3/8	R 3/8"	8	15	14,2	156	10	2,43
MB300-3/8	R 3/8"	8	15	14,2	309	10	2,43
MB200-1/2	R 1/2"	10	18,5	18,2	207	10	2,43
MB400-1/2	R 1/2"	10	18,5	18,2	410	10	2,43
MB300-3/4	R 3/4"	12	23,5	23,2	309	12	3,21
MB500-3/4	R 3/4"	12	23,5	23,2	512	12	3,21

Material: MS58 Brass.

Spiral Blade Baffles

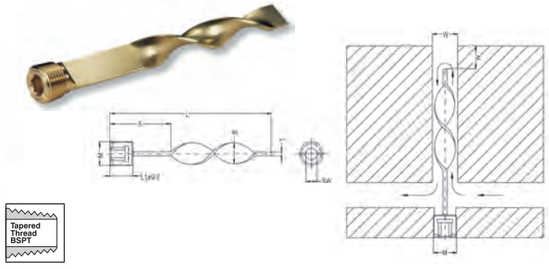

Part No	M	S	SW	W	B	L	L1	T
MSB100-1/16	R 1/16"	51	4	6,5	1/4"	101	8	1,61
MSB200-1/16	R 1/16"	102	4	6,5	1/4"	203	8	1,61
MSB100-1/8	R 1/8"	51	5	8,5	5/16"	101	8	1,61
MSB200-1/8	R 1/8"	102	5	8,5	5/16"	203	8	1,61
MSB125-1/4	R 1/4"	51	7	11,5	7/16"	127	10	2,43
MSB250-1/4	R 1/4"	102	7	11,5	7/16"	254	10	2,43
MSB150-3/8	R 3/8"	51	8	15	9/16"	152	10	2,43
MSB300-3/8	R 3/8"	102	8	15	9/16"	305	10	2,43
MSB200-1/2	R 1/2"	76	10	18,5	11/16"	203	10	2,43
MSB400-1/2	R 1/2"	127	10	18,5	11/16"	406	10	2,43
MSB300-3/4	R 3/4"	102	12	23,5	15/16"	305	12	3,21
MSB500-3/4	R 3/4"	153	12	23,5	15/16"	508	12	3,21

Material: MS58 Brass.

Hose Connector with Parallel Thread

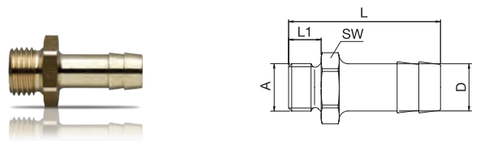

Part No.	A	D	L	L1	SW	
M10M8	M8x0,75	10	33,5	7	11	25
M10M10	M10x1	10	33,5	7	11	25
M10R1/8	G 1/8"	10	33	7	14	25
M10R1/4	G 1/4"	10	35	9	17	25
M10R3/8	G 3/8"	10	37,5	9	17	25
M13M12	M12x1,5	13	40	9	15	25
M13R1/4	G 1/4"	13	42	9	17	25
M13M14	M14x1,5	13	43	10	17	10
M13M16	M16x1,5	13	40	9	17	10
M13R3/8	G 3/8"	13	42	9	19	25
M19M24	M24x1,5	19	56	16	27	10
M19R1/2	G 1/2"	19	54	12	24	10
M19R3/4	G 3/4"	19	60	16	32	10

Hose Connector with Taper Thread BSPT

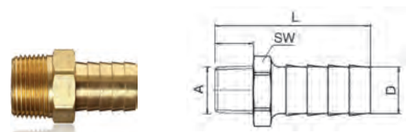

Part No.	A	D (Inch)	D (mm)	L	SW	
MH02/04	R 1/8"	1/4"	6	34	10	25
MH02/06	R 1/8"	3/8"	10	34	12	25
MH04/04	R 1/4"	1/4"	6	37	14	25
MH04/06	R 1/4"	3/8"	10	37	14	25
MH04/08	R 1/4"	1/2"	13	37	14	25
MH06/06	R 3/8"	3/8"	10	37	17	25
MH06/08	R 3/8"	1/2"	13	37	17	25
MH06/10	R 3/8"	5/8"	16	40	17	25
MH06/12	R 3/8"	3/4"	19	44	21	25
MH08/06	R 1/2"	3/8"	10	40,5	21	25
MH08/08	R 1/2"	1/2"	13	40,5	21	25
MH08/12	R 1/2"	3/4"	19	46,5	21	25
MH08/16	R 1/2"	1"	25	50	27	25
MH12/06	R 3/4"	3/8"	10	42	27	10
MH12/08	R 3/4"	1/2"	13	42	27	10
MH12/12	R 3/4"	3/4"	19	48	27	10
MH12/16	R 3/4"	1"	25	50,5	27	10
MH16/08	R 1"	1/2"	13	45,5	34	10
MH16/12	R 1"	3/4"	19	54	34	10
MH16/16	R 1"	1"	25	54	34	10
MH20/20	R 1-1/4"	1-1/4"	32	56	48	10
MH20/24	R 1-1/4"	1-1/2"	38	56	48	10
MH24/20	R 1-1/2"	1-1/4"	32	58	48	10
MH24/24	R 1-1/2"	1-1/2"	38	58	48	10

See explanation of symbols on page 374

Mould Cooling | Fittings

Couplers	p. 5	Hose Assembly Tool	p. 51	Push In Fittings	p. 67
Hoses	p. 41	Hose Clamping	p. 52	Manifolds	p. 68
Hose Protection	p. 48	**Fittings**	**p. 54**	Sealant & Tape	p. 71
Hose Cutting	p. 50	Valves	p. 61		

1

Mould Cooling

Push Lock - Hose Connector

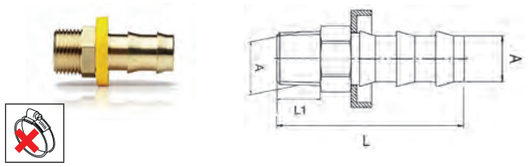

Part No.	A	D	L	L1	
P10R1/8	R 1/8	10	39	7	10
P10R1/4	R 1/4	10	39	7	10
P10M14	M14x1,5	10	42	7	10
P10R3/8	R 3/8	10	43	7	10
P13R1/4	R 1/4	13	39	10	10
P13R3/8	R 3/8	13	43	10	10
P13R1/2	R 1/2	13	43	10	10
P19R1/2	R 1/2	19	65	17	5
P19R3/4	R 3/4	19	66	18	5
P19R1/1	R 1	19	73	23	5

Hose Connector - BSPP Thread, Swivel Nut and 60° Cone Seat

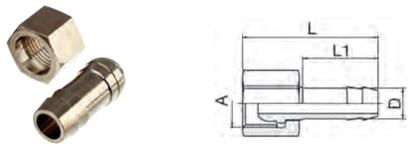

Part No.	A	D	L	L1	SW	
CM14	M14x1,5	10	39,5	22	17	10
CR1/4	G 1/4	10	39,5	22	17	10
CM16	M16x1,5	13	42	25	22	10
CR3/8	G 3/8	13	42	25	22	10
CR1/2	G 1/2	13	45	25	24	10
CM24	M24x1,5	19	52	32	30	10
CR3/4	G 3/4	19	55	32	30	10
CR1	G 1"	25	54	34	38	5

Fiber Gaskets for Flat Seat Hose Connector

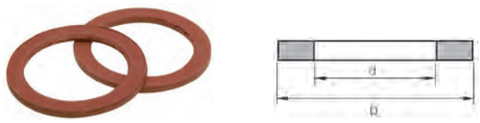

Part No.	D	d	Fit Thread Size	
GK38	14,5	8	G 3/8	1
GK12	18	12,5	G 1/2	1
GK34	24	16	G 3/4	1
GK1	30	25	G 1	1
GK114	38	31	G 1.1/4	1
GK112	44	36	G 1.1/2	1

Female Hose Connector

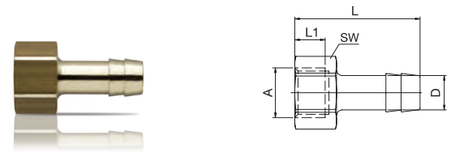

Part No.	A	D	L	L1	SW	
F10R1/8	G 1/8"	10	33	8	14	25
F10R1/4	G 1/4"	10	33	8	17	25
F10M14	M14x1,5	10	32	10	17	10
F13R1/4	G 1/4"	13	39	8	17	25
F13M16	M16x1,5	13	40	10,5	22	10
F13R3/8	G 3/8"	13	40	8	19	25

Push Lock - Hose Connector BSPP Thread, Swivel Nut and 60° Cone Seat

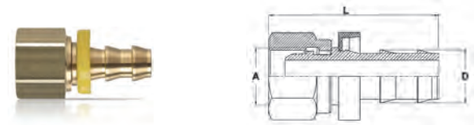

Part No.	A	D	L	SW	
CM14-PL	M14x1,5	10	43	19	10
CR1/4-PL	G 1/4"	10	46,7	19	10
CM16-PL	M16x1,5	13	47,5	21	10
CR3/8-PL	G 3/8"	13	47,5	21	10
CR1/2-PL	G 1/2"	13	48	27	10
CM24-PL	M24x1,5	19	60,5	30	5
CR3/4-PL	G 3/4"	19	60,2	30	5

Hose Connector - BSPP Thread, Swivel Nut and Flat Seat

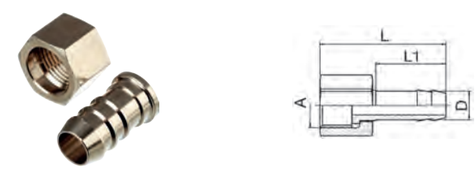

Part No.	A	D	L	L1	SW	
CFR3/8-10	G 3/8	10	39	25	22	10
CFR3/8-13	G 3/8	13	39	25	22	10
CFR1/2-13	G 1/2	13	39	25	24	10
CFR3/4-10	G 3/4	10	34	18	29	5
CFR3/4-13	G 3/4	13	36	22	29	5
CFR3/4-19	G 3/4	19	52	32	32	5
CFR1-19	G 1	19	43	25	37	5
CFR1-25	G 1	25	55	32	38	5
CFR1.1/4-32	G 1-1/4	32	55	32	48	1
CFR1.1/2-38	G 1-1/2	38	55	32	52	1

Supplied without gaskets.

Couplers p. 5
Hoses p. 41
Hose Protection p. 48
Hose Cutting p. 50
Hose Assembly Tool p. 51
Hose Clamping p. 52
Fittings p. 54
Valves p. 61
Push In Fittings p. 67
Manifolds p. 68
Sealant & Tape p. 71

Extended Hose Connector

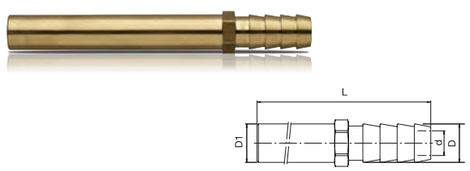

Part No.	D	D1	d	L	SW	
C120/10	10	10	6	120	11	10
C240/10	10	10	8	240	11	10
C150/13	13	14	9	150	15	10
C300/13	13	14	9	300	15	10

90° Hose Connector

Tapered Thread BSPT

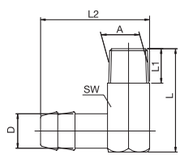

Part No.	A	D	L	L1	L2	SW	
V10M8	M8x0,75	10	27	9	39,5	15	25
V10M10	M10x1	10	27	9	31	11	25
V10R1/8	R 1/8”	10	24	10	32,5	10	25
V10R1/4	R 1/4”	10	30	11	38,5	12	25
V13R1/4	R 1/4”	13	30	10	38,5	13	25
V13M14	M14x1,5	13	34	11	42	17	10
V13R3/8	R 3/8”	13	37	11	44	19	25
V19M24	M24x1,5	19	47	12	56	24	10
V19R1/2	R 1/2”	19	47	15	58,5	24	10

Double Nipple with Taper Thread

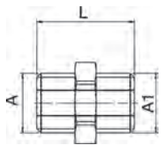

Tapered Thread BSPT

Part No.	A	A1	L	SW	
EC02/02	R 1/8”	R 1/8”	23	10	10
EC02/04	R 1/8”	R 1/4”	26	14	10
EC02/06	R 1/8”	R 3/8”	26	17	10
EC02/08	R 1/8”	R 1/8”	29,5	21	10
EC04/04	R 1/4”	R 1/4”	29	14	10
EC04/06	R 1/4”	R 3/8”	29	17	10
EC04/08	R 1/4”	R 1/2”	32,5	21	10
EC06/06	R 3/8”	R 3/8”	29	17	10
EC06/08	R 3/8”	R 1/2”	32,5	21	10
EC08/08	R 1/2”	R 1/2”	35	21	10
EC08/12	R 1/2”	R 3/4”	36,5	27	10
EC12/12	R 3/4”	R 3/4”	37	27	10
EC12/16	R 3/4”	R 1”	40,5	34	10
EC16/16	R 1”	R 1”	43	34	10
EC20/20	R 1.1/4”	R 1.1/4”	46	42	10
EC24/24	R 1.1/2”	R 1.1/2”	46	50	10

Double Nipple with Parallel Thread

DIN 3863

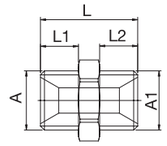

DIN 3863

Part No.	A	A1	L	L1	L2	SW	
ZR1/8	G 1/8	G 1/8	21	8	8	17	10
ZM14	M14x1,5	M14x1,5	23	9	9	17	10
ZM14-R1/4	M14x1,5	G 1/4	23	9	9	17	10
ZR1/4	G 1/4	G 1/4	23	9	9	17	10
ZR1/4-R3/8	G 1/4	G 3/8	23	9	9	19	10
ZM16	M16x1,5	M16x1,5	23	9	9	19	10
ZM16-R3/8	M16x1,5	G 3/8	23	9	9	19	10
ZR3/8	G 3/8	G 3/8	23	9	9	19	10
ZR3/8-R1/2	G 3/8	G 1/2	29	9	12	24	10
ZR1/2-M14	G 1/2	M14x1,5	27	12	9	22	10
ZR1/2-M16	G 1/2	M16x1,5	27	12	9	22	10
ZR1/2	G 1/2	G 1/2	30	12	12	24	10
ZR1/2-R3/4	G 1/2	G 3/4	36	12	16	32	10
ZR1/2-R1/1	G 1/2	G 1	40	12	16	36	10
ZM24-R1/2	M24x1,5	G 1/2	36	16	12	27	10
ZR3/4	G 3/4	G 3/4	40	16	16	32	10
ZR3/4-M24	G 3/4	M24x1,5	40	16	16	32	10
ZR3/4-R1/1	G 3/4	G 1	40	16	16	36	10
ZR1/1-R1/1	G 1	G 1	42	16	16	36	10

See explanation of symbols on page 374

Mould Cooling | Fittings

Couplers p. 5
Hoses p. 41
Hose Protection p. 48
Hose Cutting p. 50
Hose Assembly Tool p. 51
Hose Clamping p. 52
Fittings p. 54
Valves p. 61
Push In Fittings p. 67
Manifolds p. 68
Sealant & Tape p. 71

1
Mould Cooling

Double Union Nipple

Tapered Thread BSPT

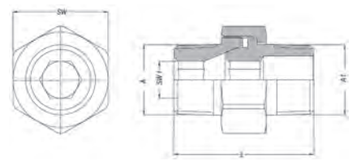

Part No.	A	A1	L	SW	SW1	
DU1/8	R 1/8”	R 1/8”	27	15	5	10
DU1/8-1/4	R 1/8”	R 1/4”	30	15	5	10
DU1/4	R 1/4”	R 1/4”	33,4	19	6	10
DU1/4-3/8	R 1/4”	R 3/8”	34,1	19	6	10
DU3/8	R 3/8”	R 3/8”	37	22	8	10
DU1/2	R 1/2”	R 1/2”	44,4	27	12	10
DU3/4	R 3/4”	R 3/4”	53	36	14	10
DU1	R 1”	R 1”	59	50	19	10
DU1-1/4	R 1-1/4”	R 1-1/4”	68	60	22	10
DU1-1/2	R 1-1/2”	R 1-1/2”	75	70	24	10

Material: Brass
3-part connector self sealing, Ideal for positioning and connecting non-rotatable parts.

Reducer Nipple

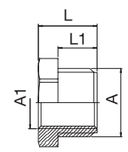

Part No.	A	A1	L	L1	SW	
GR1/4-R1/8	G 1/4”	G 1/8”	11	7	17	10
GM14-M10	M14x1,5	M10X1	11	7	17	10
GR3/8-R1/4	G 3/8”	G 1/4”	13	9	19	10
GM18-M14	M18x1,5	M14x1,5	14	9	22	10
GR1/2-R3/8	G 1/2”	G 3/8”	18	12	24	10
GR3/4-R1/2	G 3/4”	G1/2”	24	16	27	10
GM24-M16	M24x1,5	M16x1,5	24	16	27	10
GR1/1-R3/4*	G 1”	G 3/4”	28	19	34	1
GR11/2-R3/4*	G 1-1/2”	G 3/4”	32	22	50	1
GR11/2-R1/1*	G 1-1/2”	G 1”	32	22	50	1

* Without sealant coating.

Converter Nipple

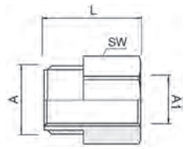

Part No.	A	A1	L	SW	
CN1/8-1/8	G 1/8	G 1/8	16	11	10
CN1/8-1/4	G 1/8	G 1/4	19	17	10
CN1/4-1/8	G 1/4	G 1/8	18	17	10
CN1/4-1/4	G 1/4	G 1/4	21	17	10
CN1/4-3/8	G 1/4	G 3/8	21	19	10
CN3/8-1/4	G 3/8	G 1/4	21	17	10
CN3/8-3/8	G 3/8	G 3/8	21	19	10
CN3/8-1/2	G 3/8	G 1/2	24	24	10
CN1/2-3/8	G 1/2	G 3/8	24	22	10
CN1/2-1/2	G 1/2	G 1/2	25	24	10
CN1/2-3/4	G 1/2	G 3/4	31	32	10

Reduction Nipple

Tapered Thread BSPT

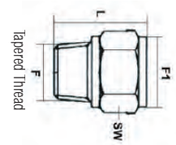

Part No.	F	F1	L	SW	
A21	R 1/8’’	G 1/4"	22,5	17,0	1
A31	R 1/8’’	G 3/8"	23,0	22,0	1
A22	R 1/4’’	G 1/4"	25,5	17,0	1
A32	R 1/4’’	G 3/8"	36,5	22,0	1
A52	R 1/4’’	G 1/2"	28,0	24,0	1
A33	R 3/8’’	G 3/8"	27,0	22,0	1
A53	R 3/8’’	G 1/2"	29,0	24,0	1
A55	R 1/2’’	G 1/2"	31,5	24,0	1
A75	R 1/2’’	G 3/4"	31,5	30,0	1

Adaptor Nipple BSPP - NPT

Part No.	A	B	H	L	CH	
BN1/8	1/8 NPT	G 1/8	8,5	19,5	14	10
BN1/4	1/4 NPT	G 1/4	13	27	17	10
BN3/8	3/8 NPT	G 3/8	13	28	22	10

Adaptor Nipple NPT - BSPP

Part No.	A	B	H	L	CH	
NB1/8	G 1/8	1/8 NPT	6	17	14	10
NB1/4	G 1/4	1/4 NPT	8	23	17	10
NB3/8	G 3/8	3/8 NPT	9	24	22	10
NB1/2	G1/2	1/2 NPT	12	31,5	27	10

Couplers	p. 5	Hose Assembly Tool	p. 51	Push In Fittings	p. 67
Hoses	p. 41	Hose Clamping	p. 52	Manifolds	p. 68
Hose Protection	p. 48	**Fittings**	**p. 54**	Sealant & Tape	p. 71
Hose Cutting	p. 50	Valves	p. 61		

Female Connection Nipple

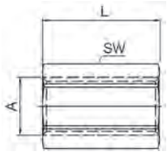

Part No.	A	L	SW	
FN1/8	G 1/8	22	11	10
FN1/4	G 1/4	26	17	10
FN3/8	G 3/8	26	22	10
FN1/2	G 1/2	30	27	10
FN3/4	G 3/4	36	32	10
FN1/1	G 1	40	41	10

Female Reduction Nipple

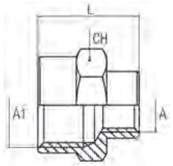

Part No.	A	A1	L	CH	
FFN1/8-1/4	G 1/8	G 1/4	19	17	10
FFN1/8-3/8	G 1/8	G 3/8	20	22	10
FFN1/4-3/8	G 1/4	G 3/8	23	22	10
FFN1/4-1/2	G 1/4	G 1/2	25	24	10
FFN3/8-1/2	G 3/8	G 1/2	27,5	24	10
FFN1/2-3/4	G 1/2	G 3/4	30	30	10
FFN3/4-1	G 3/4	G 1	41	40	10

T-Connector

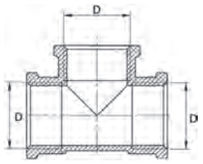

Part No.	D	
FT3/8	G 3/8"	10
FT1/2	G 1/2"	10
FT3/4	G 3/4"	10
FT1	G 1"	5
FT1-1/4	G 1.1/4"	1
FT1-1/2	G 1.1/2"	1

Material: Brass.

Elbow - Connector

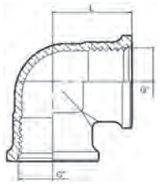

Part No.	G	L	
EL-1/2	G 1/2"	24,5	1
EL-3/4	G 3/4"	30	1
EL-1	G 1"	36	1
EL-1-1/4	G 1.1/4"	42,5	1
EL-1-1/2	G 1.1/2"	47,5	1

Material: Brass.

Rotatable Connector

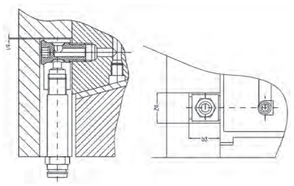

Part No.	Thread	b1	b2	b3	
VS-G1/8	G 1/8"	1	16	17,0	1
VS-M10	M10	1	16	17,0	1
VS-G1/4	G 1/4"	1	16	23,0	1
VS-M14	M14	1	16	23,0	1
VS-G1/2	G 1/2"	1	16	35,5	1

Material: Brass (Nickel Plated).

Barrel Nipple, Brass

Tapered Thread BSPT

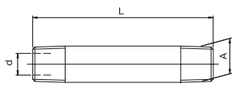

Part No.	A	L	d	
E50R1/8	R 1/8"	50	6	10
E100R1/8	R 1/8"	100	6	10
E150R1/8	R 1/8"	150	6	10
E200R1/8	R 1/8"	200	6	10
E50R1/4	R 1/4"	50	9	10
E100R1/4	R 1/4"	100	9	10
E150R1/4	R 1/4"	150	9	10
E200R1/4	R 1/4"	200	9	10
E100R3/8	R 3/8"	100	12	10
E150R3/8	R 3/8"	150	12	10
E200R3/8	R 3/8"	200	12	10

See explanation of symbols on page 374

Mould Cooling | Fittings

Couplers	p. 5	Hose Assembly Tool	p. 51	Push In Fittings	p. 67
Hoses	p. 41	Hose Clamping	p. 52	Manifolds	p. 68
Hose Protection	p. 48	**Fittings**	**p. 54**	Sealant & Tape	p. 71
Hose Cutting	p. 50	Valves	p. 61		

Barrel Nipple, Galvanized

Tapered Thread BSPT

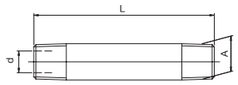

Part No.	A	L	d	
EXT25150	R 1/8"	50	6	10
EXT251100	R 1/8"	100	6	10
EXT251150	R 1/8"	150	6	10
EXT251200	R 1/8"	200	6	10
EXT251250	R 1/8"	250	6	10
EXT25250	R 1/4"	50	9	10
EXT252100	R 1/4"	100	9	10
EXT252150	R 1/4"	150	9	10
EXT252200	R 1/4"	200	9	10
EXT353100	R 3/8"	100	12	10
EXT353150	R 3/8"	150	12	10
EXT353200	R 3/8"	200	12	10
EXT554100	R 1/2"	100	12	10
EXT554150	R 1/2"	150	12	10
EXT554200	R 1/2"	200	12	10

Material: Galvanized Steel.

Pressure Plug Taper

Tapered Thread BSPT

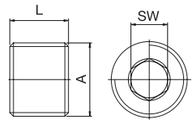

Part No.	A	L	SW	
RM8	M8x0,75	8	4	100
RM10	M10x1	8	5	100
R1/8	R 1/8"	8	5	100
RM12	M12x1,5	8	6	100
R1/4	R 1/4"	10	7	100
RM14	M14x1,5	10	7	100
R3/8	R 3/8"	10	8	100
R1/2	R 1/2"	10	10	100

Extension Nipple

Tapered Thread BSPT

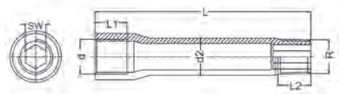

Part No.	d	R	d2	L	L1	L2	SW
EX18050	R 1/8	R 1/8	10	50	12	10	10
EX18075	R 1/8	R 1/8	10	75	12	10	10
EX18100	R 1/8	R 1/8	10	100	12	10	10
EX18125	R 1/8	R 1/8	10	125	12	10	10
EX14050	R 1/4	R 1/4	14	50	12	10	10
EX14075	R 1/4	R 1/4	14	75	12	10	10
EX14100	R 1/4	R 1/4	14	100	12	10	10
EX14125	R 1/4	R 1/4	14	125	12	10	10
EX14150	R 1/4	R 1/4	14	150	12	10	10

Material: Zinc Plated Steel.

Pressure Plug Parallel

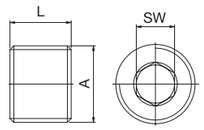

Part No.	A	L	SW	
RM6C	M6x0,75	7	3	100
RM8C	M8x0,75	8	4	100
RM10C	M10x1	8	5	100
R1/8C	G 1/8"	8	5	100
RM12C	M12x1,5	8	6	100
R1/4C	G 1/4"	10	7	100
RM14C	M14x1,5	10	7	100
R3/8C	G 3/8"	10	8	100
R1/2C	G 1/2"	10	10	100

See explanation of symbols on page 374

Couplers p. 5
Hoses p. 41
Hose Protection p. 48
Hose Cutting p. 50
Hose Assembly Tool p. 51
Hose Clamping p. 52
Fittings p. 54
Valves p. 61
Push In Fittings p. 67
Manifolds p. 68
Sealant & Tape p. 71

Hex Plug Parallel

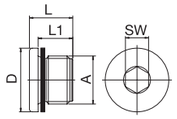

Part No.	A	D	L	L1	SW	
DM10	M10x1	14	11	8	5	25
DR1/8	G 1/8	14	11	8	5	25
DM12	M12x1,5	17	15	12	6	25
DR1/4	G 1/4	18	15	12	6	25
DM14	M14x1,5	19	15	12	6	25
DR3/8	G 3/8	22	15	12	8	25
DR1/2	G 1/2	26	18	14	10	25
DR3/4	G3/4"	32	21	16	12	1
DR1	G1"	40	22,5	16	17	1
DR1-1/2*	G1-1/2"	55	22,5	16	24	1

* With O-ring.

Channel Plug

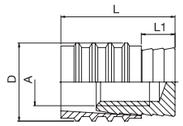

Part No.	A	D	L	L1	
S6	M3	6	11,5	3,5	25
S8	M4	8	11,5	3,5	25
S10-1	M6	10	14	4	25
S12	M6	12	14	4	25
S16	M8	16	16	4	25

Channel Plug

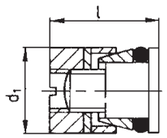

Part No.	d1	Length	
KN105-6	6	10	10
KN105-8	8	11	10
KN105-10	10	11	10
KN105-12	12	11	10
KN105-14	14	13	10
KN105-16	16	13	10

Material: Brass.
O-ring FKM.

Channel Pressure Plug, Threadless

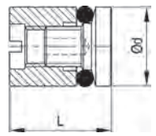

Part No.	L	d	Channel Bore d H13	Installation Key	
CP6	15	6	6	CPT6-..	10
CP8	15	8	8	CPT8-..	10
CP10	15	10	10	CPT10-..	10
CP12	15	12	12	CPT12-..	10

Material: Brass.
O-ring: FKM.

Installation Tool, with Plug Extractor

Part No.	Length	Plug diameter	
CPT6-150	150	6	1
CPT6-300	300	6	1
CPT8-150	150	8	1
CPT8-300	300	8	1
CPT10-150	150	10	1
CPT10-300	300	10	1
CPT12-150	150	12	1
CPT12-300	300	12	1

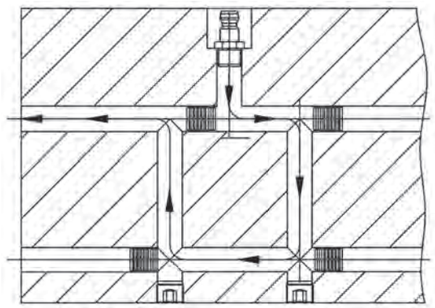

See explanation of symbols on page 374

Couplers p. 5
Hoses p. 41
Hose Protection p. 48
Hose Cutting p. 50
Hose Assembly Tool p. 51
Hose Clamping p. 52
Fittings p. 54
Valves p. 61
Push In Fittings p. 67
Manifolds p. 68
Sealant & Tape p. 71

Features

The ball valves are delivered with:

- Surface treatment: Chrome-plated
- Ring: Brass
- Handle: Short
- Handle Tag: Red

Operating Temperature: -15°C to +180°C

Working pressure: -0,99 bars to +40 bars

Brass Ball Valve, Female x Female

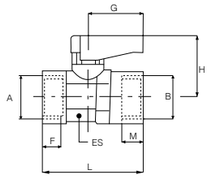

Part No.	A	B	DN	ES	F	M	L	G	H	Conditioning	
BAV13	G 1/8	G 1/8	5,5	14-15	7	7	35	19	21,0	25	1
BAV25	G 1/4	G 1/4	5,5	14-15	8	8	37	19	21,0	25	1
BAV37	G 3/8	G 3/8	8,0	18-19	9	9	42	19	22,0	10	1
BAV50	G 1/2	G 1/2	10,0	22-23	10	10	49	26	30,5	10	1
BAV75	G 3/4	G 3/4	14,0	28-30	12	12	58	50	33,0	5	1

Brass Ball Valve, Male x Female

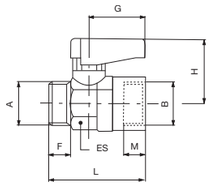

Part No.	A	B	DN	ES	F	M	L	G	H	Conditioning	
BAV13B	R 1/8	G 1/8	5,5	14-15	7	7	34	19	21,0	25	1
BAV25B	R 1/4	G 1/4	5,5	14-15	8	8	35	19	21,0	25	1
BAV37B	R 3/8	G 3/8	8,0	18-19	9	9	39	19	22,0	10	1
BAV50B	R 1/2	G 1/2	10,0	22-23	10	10	45	26	30,5	10	1
BAV75B	R 3/4	G 3/4	14,0	28-30	12	12	52	50	33,0	5	1

Colour Tag

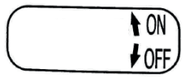

Part No.	Type*	Colors	Conditioning	
BAVRA	A	Red	100	1
BAVRB	B	Red	100	1
BAVBA	A	Blue	100	1
BAVBB	B	Blue	100	1

* A = for valve 1/8, 1/4, 3/8 - B = for valve 1/2, 3/4

See explanation of symbols on page 374

Couplers	p. 5	Hose Assembly Tool	p. 51	Push In Fittings	p. 67
Hoses	p. 41	Hose Clamping	p. 52	Manifolds	p. 68
Hose Protection	p. 48	Fittings	p. 54	Sealant & Tape	p. 71
Hose Cutting	p. 50	Valves	p. 61		

Mini Ball Valve – Male / Female

Tapered Thread BSPT

Part No.	Part No.	D	DN	I	L	G	A	H	CH
VMMF02R	VMMF02B	R 1/8"	5	11	43,5	22	22,7	28,5	21
VMMF04R	VMMF04B	R 1/4"	8	12	43,5	22	22,7	28,5	21
VMMF06R	VMMF06B	R 3/8"	8	12	43,5	22	22,7	28,5	21
VMMF08R	VMMF08B	R 1/2"	10	15,5	53,5	28	22,7	30,1	25

Mini Ball Valve – Female / Female

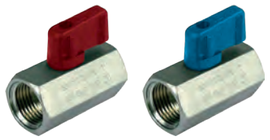

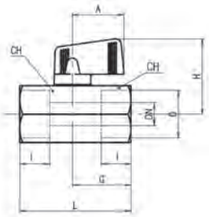

Part No.	Part No.	D	DN	I	L	G	A	H	CH
VM02R	VM02B	G 1/8"	6	10	41,5	22	22,5	31	21
VM04R	VM04B	G 1/4"	8	11	41,5	22	22,5	31	21
VM06R	VM06B	G 3/8"	8	11	41,5	22	22,5	31	21
VM08R	VM08B	G 1/2"	10	13	49	26	22,5	31	25

Quality:
- Dual sealing system allows valve to be operated in either direction making installation easier.
- No metal-to-metal moving parts.
- No maintenance ever required.
- Handle clearly shows ball position.
- Silicone-free lubricant on all seals.
- Chrome plated brass ball for longer life.
- Each valve is seal tested for maximum safety.

Body:
- One piece drawn sand blasted brass body with an extreme compact design.
- Finest brass according to EN 12164 specification.
- Patent n. 7011-B/89.

Thread:
- ISO 7/1, BS21 Male thread: BSPT – Female thread: BSPP.

Stem:
- Blowout-proof brass stem with FPM O-ring.

Handle:
- Metal Handle removable with valve in service.

Seals:
- Pure PTFE self-lubricating seats with flexible-lip design.

Working Pressure:
- 30 Bar (450 PSI).

Operating Temperature:
- +120°C (+248°F).

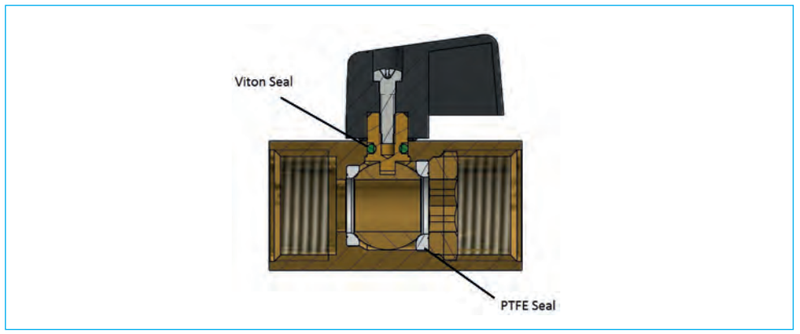

See explanation of symbols on page 374

Mould Cooling | Valves

Couplers	p. 5	Hose Assembly Tool	p. 51	Push In Fittings	p. 67
Hoses	p. 41	Hose Clamping	p. 52	Manifolds	p. 68
Hose Protection	p. 48	Fittings	p. 54	Sealant & Tape	p. 71
Hose Cutting	p. 50	Valves	p. 61		

Ball Valve T-handle – Male / Female

Tapered Thread BSPT

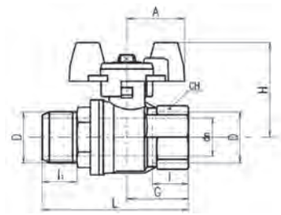

Part No.	Part No.	D	DN	I	I1	L	G	A	H	CH
VTMF04R	VTMF04B	R 1/4"	8	12	13,5	56,5	22,5	25	39	20
VTMF06R	VTMF06B	R 3/8"	9,5	12	13,5	56,5	22,5	25	39	20
VTMF08R	VTMF08B	R 1/2"	13,5	15,5	16,5	61,5	26,5	25	43	25
VTMF12R	VTMF12B	R 3/4"	18	17	18	71,5	31	30	49	31
VTMF16R	VTMF16B	R 1"	22,5	21	22	85	37,5	30	53	38
VTMF20R	VTMF20B	R 1-1/4"	28,5	23	24	99	44,5	57	84,5	48
VTMF24R	VTMF24B	R 1-1/2"	36	23	24	108	51	57	90,5	54

Quality:
- 24h 100% seal test guaranteed.
- Dual sealing system allows valve to be operated in either direction making installation easier.
- No maintenance ever required.
- Chrome plated brass ball for longer life.
- Travel stops on body to avoid stresses at stem.

Body:
- Hot forged sand blasted, nickel plated brass body and cap sealed with Loctite or equivalent thread sealant.
- Finest brass according to EN 12165 and EN 12164 (formerly DIN 17660 and UNI 5705-65) specifications.

Flow:
- Full port to DIN 3357 for maximum flow .

Thread:
- EN 10226-1, ISO 228 Male thread: BSPT – Female thread: BSPP.

Stem:
- Two FPM O-rings at the stem for maximum safety.

Seals:
- Pure PTFE self-lubricating seats with flexible-lip design .

Working Pressure:
- 40 Bar (600 PSI).
- Non-shock cold working pressure.

Operating Temperature:
- +170°C (+350°F).

Ball Valve T-handle – Female / Female

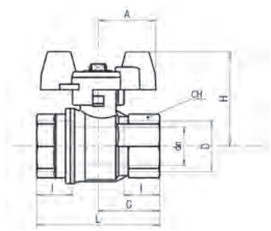

Part No.	Part No.	D	DN	I	L	G	A	H	CH
VT04R	VT04B	G 1/4"	8	12	45	22,5	25	39	20
VT06R	VT06B	G 3/8"	9,5	12	45	22,5	25	39	20
VT08R	VT08B	G 1/2"	13,5	15,5	53	26,5	25	43	25
VT12R	VT12B	G 3/4"	18	17	62	31	30	49	31
VT16R	VT16B	G 1"	22,5	21	75,5	37,7	30	53	38
VT20R	VT20B	G 1-1/4"	28,5	23	89	44,5	57	84,5	48
VT24R	VT24B	G 1-1/2"	36	23	98	49	57	90,5	54

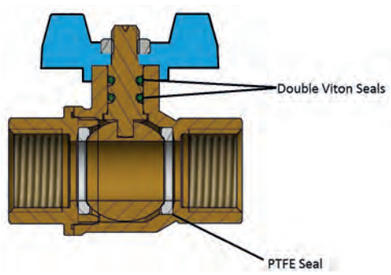

See explanation of symbols on page 374

Couplers	p. 5	Hose Assembly Tool	p. 51	Push In Fittings	p. 67
Hoses	p. 41	Hose Clamping	p. 52	Manifolds	p. 68
Hose Protection	p. 48	Fittings	p. 54	Sealant & Tape	p. 71
Hose Cutting	p. 50	Valves	p. 61		

Ball Valve Standard Handle – Male / Female

Tapered Thread BSPT

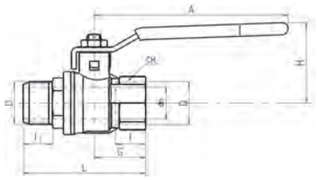

Part No.	Part No.	D	DN	I	l1	L	G	A	H	CH
VLMF04R	VLMF04B	R 1/4”	8	12	13,5	56,5	22,5	82	38	20
VLMF06R	VLMF06B	R 3/8”	9,5	12	13,5	56,5	22,5	82	38	20
VLMF08R	VLMF08B	R 1/2”	13,5	15,5	16,5	61,5	26,5	100	39,5	25
VLMF12R	VLMF12B	R 3/4”	18	17	18	71,5	31	120	43,5	31
VLMF16R	VLMF16B	R 1”	22,5	21	22	85	37,7	120	52	38
VLMF20R	VLMF20B	R 1-1/4”	28,5	23	24	99	44,5	158	57	48
VLMF24R	VLMF24B	R 1-1/2”	36	23	24	108	49	158	75,5	54

Ball Valve Standard Handle – Female / Female

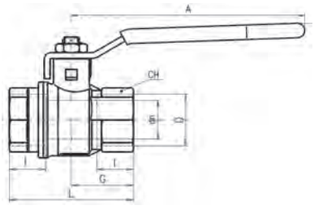

Part No.	Part No.	D	DN	I	L	G	A	H	CH
VL04R	VL04B	G 1/4”	8	12	45	22,5	82	38	20
VL06R	VL06B	G 3/8”	9,5	12	45	22,5	82	38	20
VL08R	VL08B	G 1/2”	13,5	15,5	53	26,5	82	39,5	25
VL12R	VL12B	G 3/4”	18	17	62	31	100	43,5	31
VL16R	VL16B	G 1”	22,5	21	75,5	37,7	120	52	38
VL20R	VL20B	G 1-1/4”	28,5	23	89	44,5	120	57	48
VL24R	VL24B	G 1-1/2”	36	23	98	49	158	75,5	54

Quality:
- 24h 100% seal test guaranteed.
- Dual sealing system allows valve to be operated in either direction making installation easier.
- No maintenance ever required.
- Chrome plated brass ball for longer life.
- Travel stops on body to avoid stresses at stem.

Body:
- Hot forged sand blasted, nickel plated brass body and cap sealed with Loctite or equivalent thread sealant.
- Finest brass according to EN 12165 and EN 12164 (formerly DIN 17660 and UNI 5705-65) specifications.

Flow:
- Full port to DIN 3357 for maximum flow.

Thread:
- EN 10226-1, ISO 228 Male thread: BSPT – Female thread: BSPP.

Stem:
- Two FPM O-rings at the stem for maximum safety.

Seals:
- Pure PTFE self-lubricating seats with flexible-lip design.

Working Pressure:
- 40 Bar (600 PSI).
- Non-shock cold working pressure.

Operating Temperature:
- +170°C (+350°F).

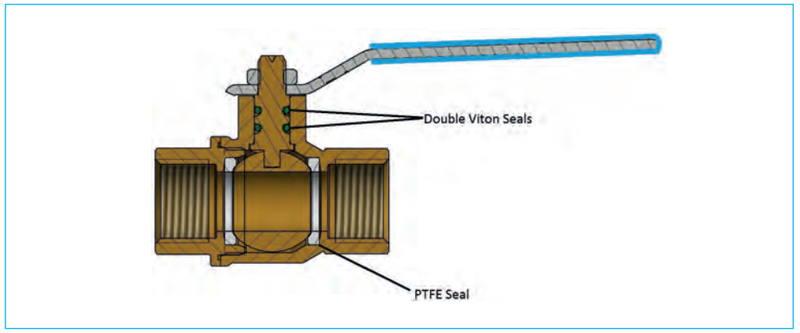

See explanation of symbols on page 374

Mould Cooling | Valves

Couplers	p. 5	Hose Assembly Tool	p. 51	Push In Fittings	p. 67
Hoses	p. 41	Hose Clamping	p. 52	Manifolds	p. 68
Hose Protection	p. 48	Fittings	p. 54	Sealant & Tape	p. 71
Hose Cutting	p. 50	Valves	p. 61		

3 Way Ball Valve – Female (L-Type)

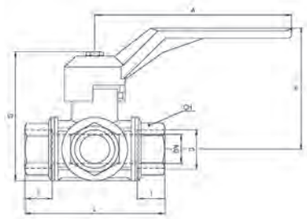

Part No.	D	DN	I	L	G	A	H	CH
V3F04R	G 1/4"	10	19	77	75	125	65	22
V3F06R	G 3/8"	12	19	77	75	125	65	22
V3F08R	G 1/2"	14	19	77	75	125	65	27
V3F12R	G 3/4"	18	23	92	91	145	83	34
V3F16R	G 1"	23	25	104	105	170	96	41
V3F20R	G 1.1/4"	29	27	118	115	170	102	50
V3F24R	G 1.1/2"	36	31	138	128	170	109	57

Quality:
- Chrome plated brass ball for longer life.
- UNI 8858 cycle and troque test performed.

Body:
- Hot forged sand blasted nickel plated body and caps.
- 3 Way Lever design allows complete range of flow handling applications.
- Copper alloy brass according to EN 12165 and EN 12164 specifications.

Stem:
- Two NBR O-Rings at the stem for maximum safety .

Seals:
- Four seats design limits mixure amoung various fluids in the system.
- PTFE seals.

Threads:
- ISO 228 female threads.

Flow:
- Full port for lowest pressure drops.

Working pressure:
- 20 Bar.

Working temperature:
- -10°C to + 120°C.

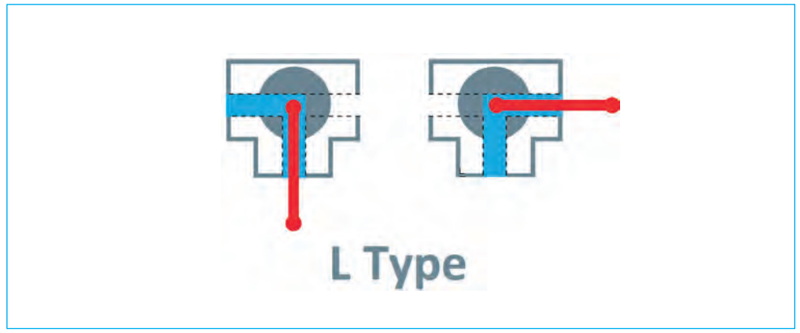

See explanation of symbols on page 374

Couplers	p. 5	Hose Assembly Tool	p. 51	Push In Fittings	p. 67
Hoses	p. 41	Hose Clamping	p. 52	Manifolds	p. 68
Hose Protection	p. 48	Fittings	p. 54	Sealant & Tape	p. 71
Hose Cutting	p. 50	**Valves**	**p. 61**		

Ball Valve with Integrated Filter

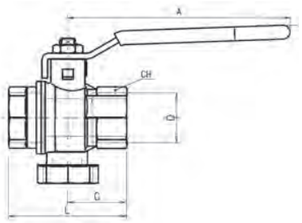

Part No.	D	L	G	A	CH
BVF1/2	G 1/2"	50,7	26,7	100	25
BVF3/4	G 3/4"	61,3	32,3	100	31
BVF1	G 1"	70,1	35,6	100	38
BVF1-1/4	G 1.1/4"	85	45	158	48
BVF1-1/2	G 1.1/2"	97,5	52	158	54
BVF2	G 2"	117	63	158	66

Ball Valve with Integrated Filter and Magnet

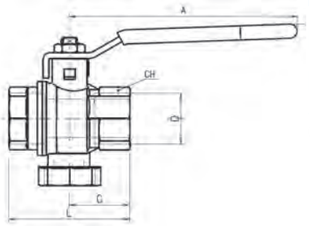

Part No.	D	L	G	A	CH
BVFM3/4	G 3/4"	61,3	32,3	100	31
BVFM1	G 1"	70,1	35,6	100	38
BVFM1-1/4	G 1.1/4"	85	45	158	48
BVFM1-1/2	G 1.1/2"	97,5	52	158	54
BVFM2	G 2"	117	63	158	66

Quality:
- Substitutes 3 different components (2 ball valves and one filter)
- Reduces leakage risks due to lower sealing points
- Cost saving due to reduced number of components
- Time saving at installation and maintenance
- Built-in vertical filter with cartridge structure in AISI304 + Nylon (filtration degree: 500 microns / 35 mesh). Size ½" has a central rib to ease filter extraction.
- Final test conforming with UNI EN 12266-1 points A3 / A4 (for 1.½" and 2" sizes: acc. to directive 2014/68/UE)
- No metal-to-metal moving parts
- Handle clearly shows ball position
- Chrome plated brass ball for longer life
- Handle stop on body to avoid stress at stem

Body:
- Hot forged sand blasted, external nickel plated brass body and cap sealed with Loctite® or equivalent thread sealant
- Finest brass according to EN 12165 and EN 12164 (formerly DIN 17660 and UNI 5705-65) specifications
- Bottom plug for an easy filter maintenance

Stem:
- Blowout-proof unplated brass stem
- Two O-rings at the stem (FKM + NBR) for maximum safety

Sealing:
- Pure PTFE seats

Threads:
- ISO 228 parallel female by female threads

Flow:
- Nominal port

Handle:
- Zinc plated steel handle with plastic dip coating
- WARNING: do not exceed reasonable temperature and/or electrical load

Magnet:
- Neodymium (12.000 gauss) NdFeB

Working pressure & temperature:
- 30 Bar (450 PSI) non-shock cold working pressure for sizes ½" to 1", 20 Bar (290 PSI) for sizes 1.¼" to 2"
- -20°C / +150°C (-4°F / +300°F)
- WARNING: freezing of the fluid in the installation may severely damage the valve

PED directive:
- According to 2014/68/UE, 1.¼" and superior sizes cannot be used with dangerous fluids

Cost Saving Solution

BVF Filter Valve substitues traditional Y Strainers combined with 2 ball valves.

- Full port
- Low pressure drop
- Assembly space and time very limited
- Easy to be cleaned and maintained
- All impurities gather inside the filter
- Maximum pressure 30 bar (PN30)
- Increased filter quality with cartridge structure for all sizes. Filter for size 1/2" will have a central rib to ease filter extraction

Couplers	p. 5	Hose Assembly Tool	p. 51	**Push In Fittings**	**p. 67**
Hoses	p. 41	Hose Clamping	p. 52	Manifolds	p. 68
Hose Protection	p. 48	Fittings	p. 54	Sealant & Tape	p. 71
Hose Cutting	p. 50	Valves	p. 61		

Straight Male Push-In Fitting

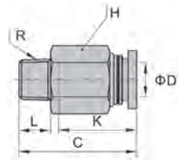

Part No.	Part No.	D	R	L	K	C	H
MSM081/8R	MSM081/8B	8	R 1/8"	7,5	18,5	27	14
MSM081/4R	MSM081/4B	8	R 1/4"	10	18,5	25	14
MSM083/8R	MSM083/8B	8	R 3/8"	9	18,5	23,5	17
MSM101/4R	MSM101/4B	10	R 1/4"	10	19	30	17
MSM103/8R	MSM103/8B	10	R 3/8"	10	19	25	17
MSM123/8R	MSM123/8B	12	R 3/8"	11	20	26	21
MSM121/2R	MSM121/2B	12	R 1/2"	13	20	26	21

Material: Brass, Nickel Plated. Seal: EPDM.

Straight Female Push-In Fitting

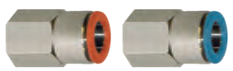

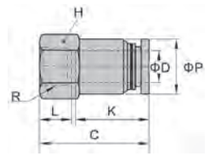

Part No.	Part No.	D	R	L	K	C	H	P
MSF081/8R	MSF081/8B	8	G 1/8"	8	18	28,3	14	14
MSF081/4R	MSF081/4B	8	G 1/4"	11	18	30,5	17	14
MSF083/8R	MSF083/8B	8	G 3/8"	12	18	31,5	19	14
MSF101/4R	MSF101/4B	10	G 1/4"	11	19	30,5	17	16
MSF103/8R	MSF103/8B	10	G 3/8"	12	19	33	19	16
MSF123/8R	MSF123/8B	12	G 3/8"	12	20	33,5	19	19
MSF121/2R	MSF121/2B	12	G 1/2"	13,5	21	37	24	19

Material: Brass, Nickel Plated. Seal: EPDM.

Ether Based Polyurethane Tubing for Push-In Fittings - Temperature max 70°C / Peak 100°C

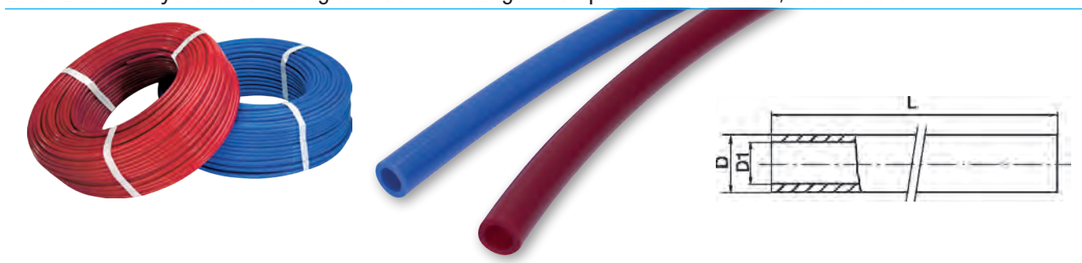

Part No.	Description	D (mm)	D1 (mm)	Working Pressure* PSI	Working Pressure* Bar	Bend Radius (mm)*	Coil Length L	Colour
PPU8B	Pneumatic Polyurethane Tubing 8mm x 5.5mm	8	5.5	116	8	31	25m	
PPU8R	Pneumatic Polyurethane Tubing 8mm x 5.5mm	8	5.5	116	8	31	25m	
PPU10B	Pneumatic Polyurethane Tubing 10mm x 7mm	10	7	116	8	40	25m	
PPU10R	Pneumatic Polyurethane Tubing 10mm x 7mm	10	7	116	8	40	25m	
PPU12B	Pneumatic Polyurethane Tubing 12mm x 8mm	12	8	116	8	43	25m	
PPU12R	Pneumatic Polyurethane Tubing 12mm x 8mm	12	8	116	8	43	25m	

* Working pressure of 8 bar / 116 PSI is based on temperature of 20°C, higher temperature will result in lower pressure resistance. See below graph for details.

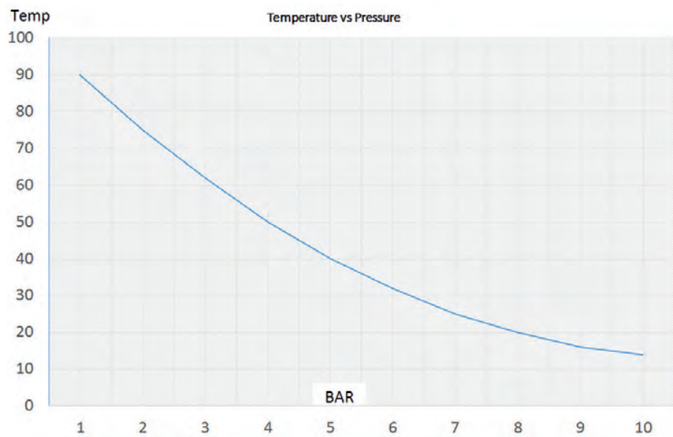

Couplers	p. 5	Hose Assembly Tool	p. 51	Push In Fittings	p. 67
Hoses	p. 41	Hose Clamping	p. 52	**Manifolds**	**p. 68**
Hose Protection	p. 48	Fittings	p. 54	Sealant & Tape	p. 71
Hose Cutting	p. 50	Valves	p. 61		

3/4" Inline Anodized Manifold

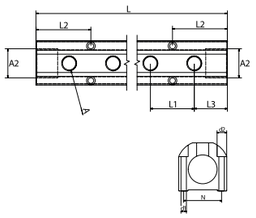

Part No.	Colour	Ports	A	A2	L2	L3	L1	d1	d2	N	L
IM3-4-1/4-R		4	G 1/4"	G 3/4"	57,2	38,1	38,1	4,5	8	31	190,5
IM3-4-1/4-B		4	G 1/4"	G 3/4"	57,2	38,1	38,1	4,5	8	31	190,5
IM3-6-1/4-R		6	G 1/4"	G 3/4"	57,2	38,1	38,1	4,5	8	31	266,7
IM3-6-1/4-B		6	G 1/4"	G 3/4"	57,2	38,1	38,1	4,5	8	31	266,7
IM3-8-1/4-R		8	G 1/4"	G 3/4"	57,2	38,1	38,1	4,5	8	31	342,9
IM3-8-1/4-B		8	G 1/4"	G 3/4"	57,2	38,1	38,1	4,5	8	31	342,9

Rugged Low Cost Design.
Anodized Aluminium in Blue or Red for easy identification of Flow and Return.
Quick Mould Change.

Eliminates Piping Errors.
Shorter Hose Lengths minimise pressure drops and reduces clutter.
Maximum Unresticted Flow Rates Possible.

1" Inline Anodized Manifold

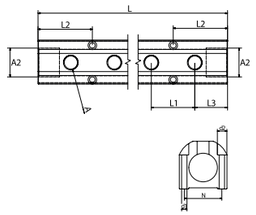

Part No.	Colour	Ports	A	A2	L2	L3	L1	d1	d2	N	L
IM4-4-1/4-R		4	G 1/4"	G 1"	63,5	38,1	38,1	7	10,5	40,6	190,5
IM4-4-1/4-B		4	G 1/4"	G 1"	63,5	38,1	38,1	7	10,5	40,6	190,5
IM4-4-3/8-R		4	G 3/8"	G 1"	63,5	38,1	50,8	7	10,5	40,6	228,6
IM4-4-3/8-B		4	G 3/8"	G 1"	63,5	38,1	50,8	7	10,5	40,6	228,6
IM4-6-1/4-R		6	G 1/4"	G 1"	63,5	38,1	38,1	7	10,5	40,6	266,7
IM4-6-1/4-B		6	G 1/4"	G 1"	63,5	38,1	38,1	7	10,5	40,6	266,7
IM4-6-3/8-R		6	G 3/8"	G 1"	63,5	38,1	50,8	7	10,5	40,6	330,2
IM4-6-3/8-B		6	G 3/8"	G 1"	63,5	38,1	50,8	7	10,5	40,6	330,2
IM4-8-1/4-R		8	G 1/4"	G 1"	63,5	38,1	38,1	7	10,5	40,6	342,9
IM4-8-1/4-B		8	G 1/4"	G 1"	63,5	38,1	38,1	7	10,5	40,6	342,9
IM4-8-3/8-R		8	G 3/8"	G 1"	63,5	38,1	50,8	7	10,5	40,6	431,8
IM4-8-3/8-B		8	G 3/8"	G 1"	63,5	38,1	50,8	7	10,5	40,6	431,8
IM4-10-3/8-R		10	G 3/8"	G 1"	63,5	38,1	50,8	7	10,5	40,6	533,4
IM4-10-3/8-B		10	G 3/8"	G 1"	63,5	38,1	50,8	7	10,5	40,6	533,4
IM4-12-3/8-R		12	G 3/8"	G 1"	63,5	38,1	50,8	7	10,5	40,6	635,0
IM4-12-3/8-B		12	G 3/8"	G 1"	63,5	38,1	50,8	7	10,5	40,6	635,0

Rugged Low Cost Design.
Anodized Aluminium in Blue or Red for easy identification of Flow and Return.
Quick Mould Change.

Eliminates Piping Errors.
Shorter Hose Lengths minimise pressure drops and reduces clutter.
Maximum Unresticted Flow Rates Possible.

1-1/2" Inline Anodized Manifold

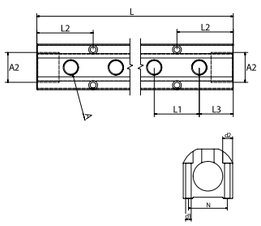

Part No.	Colour	Ports	A	A2	L2	L3	L1	d1	d2	N	L
IM6-4-1/2-R		4	G 1/2"	G 1-1/2"	76,2	50,8	50,8	7	10,5	57	254
IM6-4-1/2-B		4	G 1/2"	G 1-1/2"	76,2	50,8	50,8	7	10,5	57	254
IM6-6-1/2-R		6	G 1/2"	G 1-1/2"	76,2	50,8	50,8	7	10,5	57	355,6
IM6-6-1/2-B		6	G 1/2"	G 1-1/2"	76,2	50,8	50,8	7	10,5	57	355,6
IM6-8-1/2-R		8	G 1/2"	G 1-1/2"	76,2	50,8	50,8	7	10,5	57	457,2
IM6-8-1/2-B		8	G 1/2"	G 1-1/2"	76,2	50,8	50,8	7	10,5	57	457,2
IM6-10-1/2-R		10	G 1/2"	G 1-1/2"	76,2	50,8	50,8	7	10,5	57	558,8
IM6-10-1/2-B		10	G 1/2"	G 1-1/2"	76,2	50,8	50,8	7	10,5	57	558,8
IM6-12-1/2-R		12	G 1/2"	G 1-1/2"	76,2	50,8	50,8	7	10,5	57	660,4
IM6-12-1/2-B		12	G 1/2"	G 1-1/2"	76,2	50,8	50,8	7	10,5	57	660,4

Rugged Low Cost Design.
Anodized Aluminium in Blue or Red for easy identification of Flow and Return.
Quick Mould Change.

Eliminates Piping Errors.
Shorter Hose Lengths minimise pressure drops and reduces clutter.
Maximum Unresticted Flow Rates Possible.

Mould Cooling | Manifolds

Couplers	p. 5	Hose Assembly Tool	p. 51	Push In Fittings	p. 67
Hoses	p. 41	Hose Clamping	p. 52	**Manifolds**	**p. 68**
Hose Protection	p. 48	Fittings	p. 54	Sealant & Tape	p. 71
Hose Cutting	p. 50	Valves	p. 61		

1

Mould Cooling

Blanking Plugs

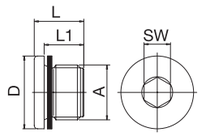

Part No.	A	D	L	L1	SW	
DR3/4	G 3/4"	32	21	16	12	1
DR1	G 1"	40	22,5	16	17	1
DR1-1/2*	G 1-1/2"	55	22,5	16	24	1

* With O-Ring.

Brackets for Stainless Steel Manifolds

Part No.	Type	
SS-Bracket	1"	1
SS-5-Bracket	1-1/4"	1

Electro plated steel bracket for installation of a single manifold.
2 Brackets needed for correct installation.

Equal Connector for Stainless Manifolds

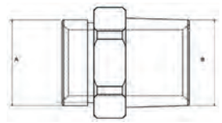

Part No.	A	B	
ECM1	G 1"	R 1"	1
ECM1-1/4	G 1-1/4"	R 1-1/4"	1

Material: Brass Nickel Plated.
Max temp.: 130°C.

O-Ring: 1" = EPDM.
1-1/4" = SILICONE.

Blanking Plug

Part No.	Thread	Seal
SSEC1	G 1"	FKM max. temp. 200°C
SSEC1-1/4	G 1-1/4"	FKM max. temp. 200°C

Material: Nickel plated brass

See explanation of symbols on page 374

Couplers	p. 5	Hose Assembly Tool	p. 51	Push In Fittings	p. 67
Hoses	p. 41	Hose Clamping	p. 52	**Manifolds**	**p. 68**
Hose Protection	p. 48	Fittings	p. 54	Sealant & Tape	p. 71
Hose Cutting	p. 50	Valves	p. 61		

Heavy Duty Inline Stainless Steel Manifold

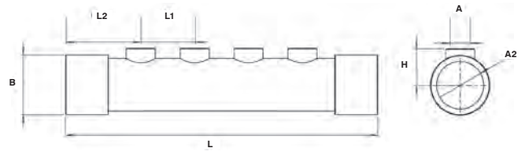

Part No.	Ports	A	A2	L	L1	L2	B	H
SSIM4-4-3/8	4	G 3/8"	G 1"	290	50	69,5	40	31
SSIM4-8-3/8	8	G 3/8"	G 1"	490	50	69,5	40	31
SSIM4-12-3/8	12	G 3/8"	G 1"	690	50	69,5	40	31
SSIM6-4-1/2	4	G 1/2"	G 1.1/2"	290	50	69,5	55	34
SSIM6-8-1/2	8	G 1/2"	G 1.1/2"	490	50	69,5	55	34
SSIM6-12-1/2	12	G 1/2"	G 1.1/2"	690	50	69,5	55	34

Welded pipe construction
Stainless Steel AISI 304
Perfect for aggressive water and oil

Max. pressure 10 bar.
Max temp. 200°C.

Brackets for heavy duty Stainless Steel Manifolds

Part No.	Size	
SS-5-Bracket	1"	1
SS-6-Bracket	1.1/2"	1

Electro plated steel bracket for installation of a single manifold
2 Brackets needed for correct installation

Blanking Plugs

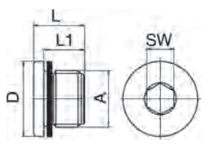

Part No.	A	D	L	L1	SW	
DR1	G 1"	40	22,5	16	17	1
DR1-1/2*	G 1-1/2"	55	22,5	16	24	1

Material: Plated Brass
With O-ring

Inline Stainless Steel Manifold

STAINLESS STEEL

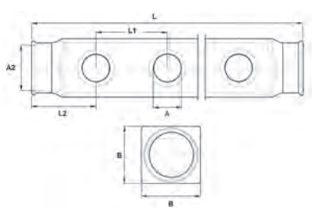

Part No.	Ports	A	A2	L	L1	L2	B
SSIM4-4-1/2	4	G 1/2"	G 1"	240	50	45	40
SSIM4-6-1/2	6	G 1/2"	G 1"	340	50	45	40
SSIM4-8-1/2	8	G 1/2"	G 1"	440	50	45	40
SSIM4-10-1/2	10	G 1/2"	G 1"	540	50	45	40
SSIM4-12-1/2	12	G 1/2"	G 1"	640	50	45	40
SSIM5-4-1/2	4	G 1/2"	G 1-1/4"	240	50	45	50
SSIM5-6-1/2	6	G 1/2"	G 1-1/4"	340	50	45	50
SSIM5-8-1/2	8	G 1/2"	G 1-1/4"	440	50	45	50
SSIM5-10-1/2	10	G 1/2"	G 1-1/4"	540	50	45	50
SSIM5-12-1/2	12	G 1/2"	G 1-1/4"	640	50	45	50

Stainless steel AISI 304.
Perfect for agressive water and oil.

Max. pressure 10 bar.
Max temp. 200°C.

Couplers	p. 5	Hose Assembly Tool	p. 51	Push In Fittings	p. 67
Hoses	p. 41	Hose Clamping	p. 52	Manifolds	p. 68
Hose Protection	p. 48	Fittings	p. 54	**Sealant & Tape**	**p. 71**
Hose Cutting	p. 50	Valves	p. 61		

Pipe Sealant

Part No.	Size	Max Thread	Breakaway Torque
542	50 ml.	< 3/4"	15 Nm.
577	50 ml.	< 3"	11 Nm.
577-2	250 ml.	< 3"	11 Nm.

Single component, liquid adhesive that cures hard in the absence of air or oxygen.
542 Anaerobic thread sealant for fine metal threaded fittings, especially hydraulic pipes.
577 General purpose anaerobic thread sealant for all coarse metal threads.
Disassembly strength: Medium
Temperature range: -50°C - +150°C.

Thread Locker

Part No.	Size	Max Thread	Temperature range
77	50 ml.	< M80	-50°C - +150°C

Anaerobic Thread locker for permanent sealing of metal threaded fittings.
Single component, liquid adhesive that cures hard in the absence of air or oxygen.
Maximum Thread Size: M80.
Disassembly strength: High.
Temperature range: -50°C - +150°C.
Breakaway torque: 32 Nm.
Pack sizes: 50ml.

PTFE Tape

Part No.	Size	Length
TEF	12 mm	12 m

Excellent for sealing all thread sizes.
Temperature range: up to 230°C.

See explanation of symbols on page 374

73 Digital Flow Monitors

86 Analogue Flow Meters

89 De-Scaling

90 Pressure Testing

91 Water Treatment

92 Filters

94 Valves with Filters

flosense®

Flosense; the new affordable, flexible flow monitoring system designed for accurate measuring and monitoring of flow, temperature and pressure variations in cooling circuits

Flosense is designed to be installed in various locations within the cooling circuit including the main water supply, the mould heater, critical cooling channels or distribution manifolds.

Quick to install and easy to set-up, Flosense is a critical component in any injection moulding configuration and should form part of any setup where cost control and quality are key considerations.

Using these values, Flosense provides an indication of the stability of the process and checks the efficiency, identifying wasted energy and variations in pressure which could indicate leaks or blocked waterways.

Flosense is designed to be installed in various locations within the cooling circuit including the main water supply, the mould heater, critical cooling channels or distribution manifolds.

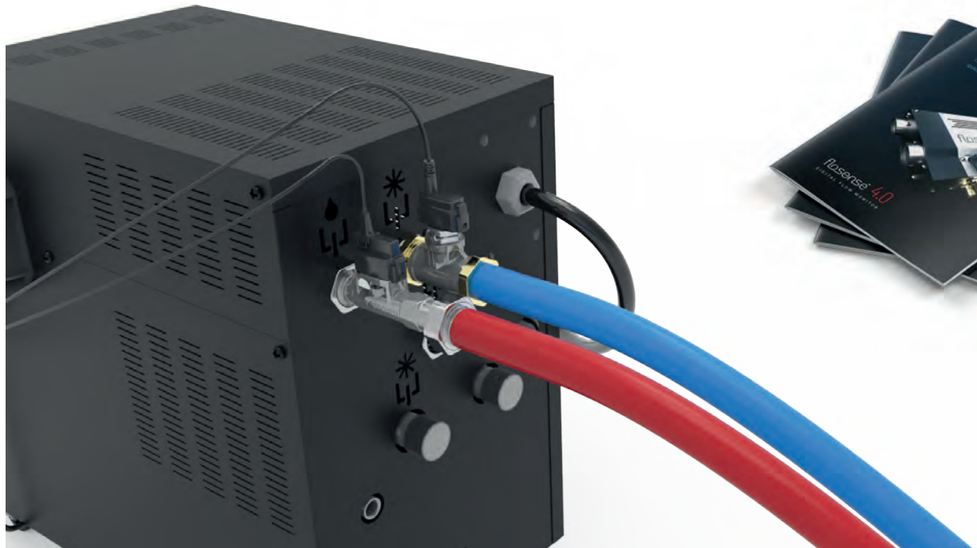

Pressure loss is caused by hoses, fittings and valves and will affect the productivity.

Difference between inlet pressure and return pressure is measured as Delta P.

Variation in Delta P could indicate pump failure, blocked waterway, leaks etc.

As the cooling water passes through the mould it transfers heat from the steel into the cooling water. The more turbulent the flow the more efficient this process of cooling.

Difference between inlet temperature and return temperature is measured as Delta T.

Sudden variation in Delta T may be caused by a faulty heater/cooler, blocked channel, scale build up etc.

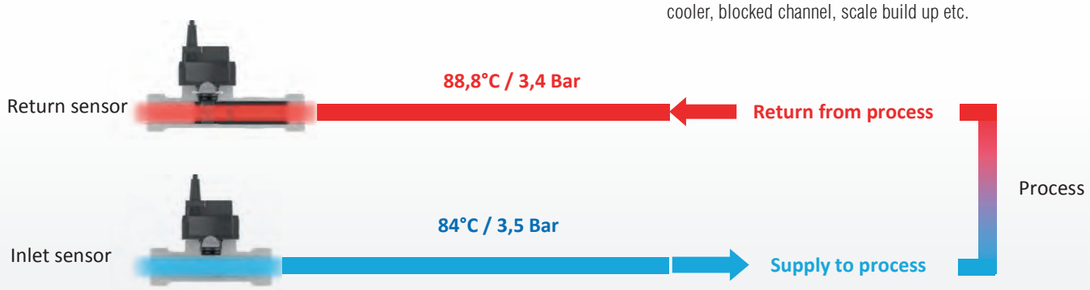

Flosense, provides visibility of key cooling circuit metrics, improves efficiency, enhances productivity and profitability.

Energy Transfer Indicator
Heat is transfered from the mould through the water channels, Flosense calculates the heat transfer as energy units BTU or kWh. This feature illustrates the effeciency of the process.

Turbolent Flow Indicator
Often regarded as a key indicator in the efficiency of a mould cooling circuit, Flosense is fitted with a turbulent flow indicator. The unit will indicate laminar, transitional and turbulent flow as well as monitoring the Reynolds number, based on flow diameter and percentage glycol in the system.

Improving the flow from laminar to turbulent can increase the heat transfer efficiency by up to 500%.

Flosense, provides features and interfaces to monitor, analyse and verify data, essential for your productivity and quality.

Alarm Output
With programmable alarm limits on flow, temperature and pressure any variation in the values being monitored will trigger an on-screen alarm. An external alarm output signal can be connected to auxiliary equipment which could be a visual or audible beacon, the mould heater or the injection moulding machine.

Even in a 'hose burst' situation the unit will identify a sudden loss of pressure and the unit can either be connected to an alarm or could be used to automatically shut down the mould heater.

DATA RECORDING
Data is recorded and stored in the internal memory enough to display data for the previous 30 days.

Flow, Temperature and Pressure are logged and may be viewed in the graphing screen.

The last 30 days of data is recorded and stored on the internal memory.

Data Export
It is also possible to download the data to a laptop using the integrated USB port for further analysis.

The data is stored as text file and can be analysed using excel or other analysing software.

Flow Sensor Kit - 1 or 2 Circuits

NEW: 2 flow circuits from same control

FLOW TEMPERATURE

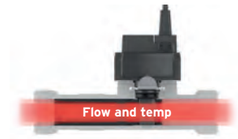

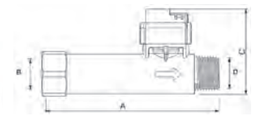

1 Sensor Kit	2 Sensors Kit	Flow capacity l/m	A	Connection B	C	D	Max Temp.
FSE-0510-K	FSE-0510-K-D	0,5-10	100	G 1/2"	58,8	1/4"	120°C
FSE-0510-K-HT	FSE-0510-K-HT-D	0,5-10	100	G 1/2"	58,8	1/4"	160°C
FSE-120-K	FSE-120-K-D	1-20	100	G 1/2"	58,8	1/4"	120°C
FSE-120-K-HT	FSE-120-K-HT-D	1-20	100	G 1/2"	58,8	1/4"	160°C
FSE-240-K	FSE-240-K-D	2-40	100	G 1/2"	58,8	1/4"	120°C
FSE-240-K-HT	FSE-240-K-HT-D	2-40	100	G 1/2"	58,8	1/4"	160°C

- Touch Screen
- Power Supply
- Sensor(s) (flow+temp)
- Cable(s) (1,2 m.)
- USB Cable

Multi Sensor Kit - 1 or 2 Circuits

NEW: 2 flow circuits from same control

PRESSURE FLOW TEMPERATURE

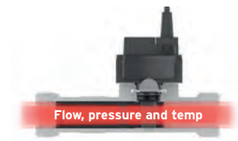

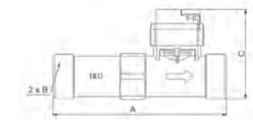

1 Sensor Kit	2 Sensors Kit	Flow capacity l/m	A	Connection B	C	Max Temp.	Pressure Range
FS-115-K	FS-115-K-D	2-20	110	G 3/4"	58,8	120°C	0-10 Bar
FS-240-K	FS-240-K-D	4-40	110	G 3/4"	58,8	120°C	0-10 Bar
FS-5100-K	FS-5100-K-D	10-100	129	G 1"	66,5	120°C	0-10 Bar
FS-10200-K	FS-10200-K-D	20-200	137,5	G 1-1/4"	74,1	120°C	0-10 Bar
FS-20400-K*	FS-20400-K-D*	20-200	180	G 1-1/2"	85	120°C	0-10 Bar

- Touch Screen
- Power Supply
- Sensor(s) (flow+temp+pressure)
- Cable(s) (1,2 m.)
- USB Cable

* Composite (PPS, PA66)

Delta Multi Sensor Kit - 1 Circuit

PRESSURE FLOW TEMPERATURE ΔT ΔP BTU - kWh

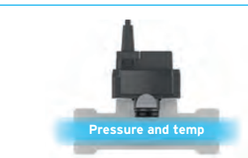

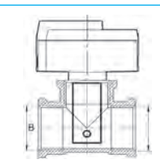

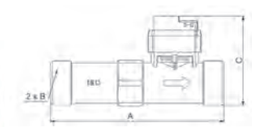

Inlet/outlet Sensor Kit	Flow capacity l/m	A	Connection B	C	Max Temp.	Pressure Range
FS-115-10-K	2-20	110	G 3/4"	58,8	120°C	0-10 Bar
FS-240-10-K	4-40	110	G 3/4"	58,8	120°C	0-10 Bar
FS-5100-10-K	10-100	129	G 1"	66,5	120°C	0-10 Bar
FS-10200-10-K	20-200	137,5	G 1-1/4"	74,1	120°C	0-10 Bar
FS-20400-10-K*	40-400	180	G 1-1/2"	85	120°C	0-10 Bar

- Touch Screen
- Power Supply
- Sensor (flow+temp+pressure)
- Inlet Sensor (Temp+pressure)
- 2 x Cables (1,2 m.)
- USB Cable

* Composite (PPS, PA66)

Multi Sensor Unit

PRESSURE
FLOW
TEMPERATURE

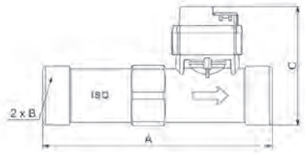

Part No.	Flow capacity l/m	A	B	C	Max temperature	Hosetail Ref.
FS-115	2-20	110	G 3/4"	58,8	120°C	CFR3/4-13
FS-240	4-40	110	G 3/4"	58,8	120°C	HT-316-2 / CFR3/4-19
FS-5100	10-100	129	G 1"	66,5	120°C	CFR1-25 / CFR1-25
FS-10200	20-200	137,5	G 1-1/4"	74,1	120°C	HT-316-4 / CFR1.1/4-32
FS-20400	40-400	180	G1-1/2"	80,1	120°C	1.1/2" / 38 mm. (Included)

Includes Flow Pipe and Multi Sensor (cable not included).

Optional (not included in the Kit) AISI 316

Swivel Hosetail Fitings

Gaskets

Stainless Steel Part No.	Brass Part No.	A1 x D1	Sensor Ref.	Part No.
	CFR3/4-13	3/4" X 13	FS-115	GK34
HT-316-2	**CFR3/4-19**	3/4" X 19	FS-240	GK34
HT-316-3	**CFR1-25**	1" x 25	FS-5100	GK1
	CFR1.1/4-32	1.1/4 x 32	FS-10200	GK114
	CFR1.1/2-38	1.1/2 x 38	FS-20400	GK112

Flow Sensor Unit

FLOW
TEMPERATURE

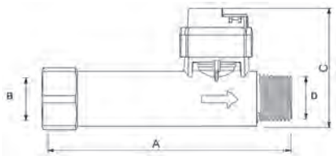

Part No.	Flow capacity l/m	A	B	C	D	Max temperature	B Connection ref.
FSE-0510	0,5-10	100	G 1/2"	58,8	1/4"	120°C	xxNRF
FSE-0510-HT	0,5-10	100	G 1/2"	58,8	1/4"	160°C	xxNRF
FSE-120	1-20	100	G 1/2"	58,8	1/4"	120°C	xxNRF
FSE-120-HT	1-20	100	G 1/2"	58,8	1/4"	160°C	xxNRF
FSE-240	2-40	100	G 1/2"	58,8	1/4"	120°C	xxNRF
FSE-240-HT	2-40	100	G 1/2"	58,8	1/4"	160°C	xxNRF

Includes Flow Pipe and Flow Sensor (cable not included)

flosense

2
Thermal Management

Port Connector Plugs

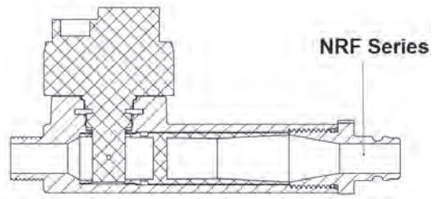

Part No.	Connection	Size/series
09NRF	G 1/2"	09 EURO Style
13NRF	G 1/2"	13 EURO Style
20NRF	G 1/2"	20 Int. Style
30NRF	G 1/2"	30 Int. Style
08NRF	G 1/2"	French Type
F9NRF	G 1/2"	French Matic
06NRF	G 1/2"	06 Scandinavian Style
10MF	G 1/2"	10 mm Hosetail
13MF	G 1/2"	13 mm Hosetail

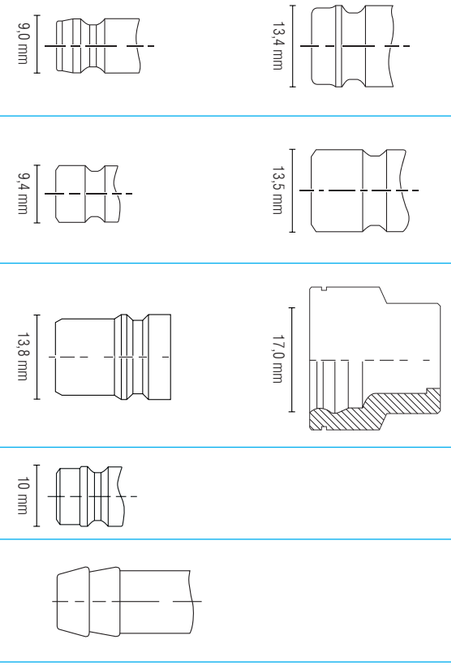

Sensor Cable

Part No.	Connection	Length (mm)
FS-SC1200	M8/Molex	1200
FS-SC2900	M8/Molex	2900
FS-SC1200-GND	M8/Molex	1200
FS-SC2900-GND	M8/Molex	2900

GND Type includes Earth Wire and Sensor Clip Connector

Extension Cable 4 pin

Part No.	Connection	Length (mm)
FS-4P-EC1000	M8/M8	1000
FS-4P-EC2000	M8/M8	2000
FS-4P-EC5000	M8/M8	5000

MULTI ZONE MONITORING

Upgrade your moulding machine with a new digital flow monitor to improve your productivity

Digital flow monitors will give you many advantages such as:

- Digital monitoring of Flow, Temperature and Pressure
- Alarm Output
- Higher flow capacity
- Higher temperature range
- Data storage and export
- Faster Mould changeovers
- OPC-UA / Euromap interface

Flosense 2.0

Manifolds - Retrofit Style

Page 80

Flosense 3.0

All in One Flow Regulator Style
Integrated Control Screen

Page 81

Flosense 4.0

Compact Dual Line Manifolds
Integrated Sensors and Valves

Page 82

Touch Screen

Touch Screen mounted to the Manifolds

Equipped with power, alarm, USB and Ethernet connections.

Display	
Type	Touch
Size	7,1”
Voltage	12-24 Volt.
Data	USB + Ethernet
Communications	OPC UA
Internal memory	Up to 30 days data (FIFO)

Part No.	Size	Manifold Inputs	Power Connection	Alarm Output	Interface
FS-7100	7.1”	4	12V	Yes	OPC-UA

The main screen will show all circuits with information about flow and temperature. The main inlet and outlet will also show including pressure.

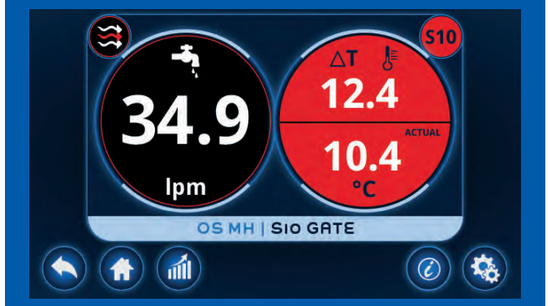

By clicking on a specific circuit you will see detailed information, including delta T (heat transfer) of the specific channel. Also, turbulent flow indicator is included.

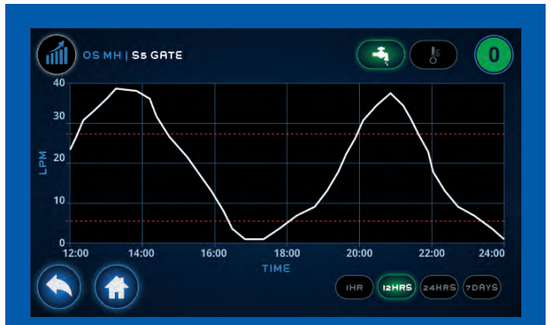

Data i stored in the internal memory and can be displayed in graphical view for each circuit. Data can also be exported for external use.

The system is equipped with Audit Log to keep track of all events including user ID tracer.

Flosense 2.0 Manifold

PRESSURE
FLOW
TEMPERATURE

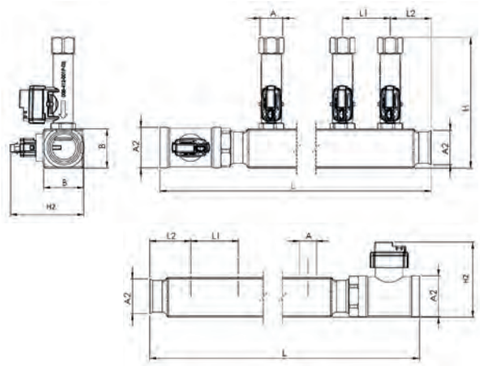

1" Manifold	Flow sensor range option (l/m)												
Part No.	0.5-10	1-20	2-40	Ports	A	A2	B	L	L1	L2	H	H2	Temp.
F2M4-x-xx	•	•	•	4	G 1/2"	G 1"	40	315	50	45	140	66,5	120°C
F2M4HT-x-xx	•	•	•	4	G 1/2"	G 1"	40	315	50	45	140	66,5	160°C
F2M6-x-xx	•	•	•	6	G 1/2"	G 1"	40	415	50	45	140	66,5	120°C
F2M6HT-x-xx	•	•	•	6	G 1/2"	G 1"	40	415	50	45	140	66,5	160°C
F2M8-x-xx	•	•	•	8	G 1/2"	G 1"	40	515	50	45	140	66,5	120°C
F2M8HT-x-xx	•	•	•	8	G 1/2"	G 1"	40	515	50	45	140	66,5	160°C
F2M10-x-xx	•	•	•	10	G 1/2"	G 1"	40	615	50	45	140	66,5	120°C
F2M10HT-x-xx	•	•	•	10	G 1/2"	G 1"	40	615	50	45	140	66,5	160°C
F2M12-x-xx	•	•	•	12	G 1/2"	G 1"	40	715	50	45	140	66,5	120°C
F2M12HT-x-xx	•	•	•	12	G 1/2"	G 1"	40	715	50	45	140	66,5	160°C

1.1/4" Manifold	Flow sensor range option (l/m)												
Part No.	0.5-10	1-20	2-40	Ports	A	A2	B	L	L1	L2	H	H2	Temp.
F2M4-L-x-xx	•	•	•	4	G 1/2"	G 1.1/4"	50	315	50	45	150	74,1	120°C
F2M4HT-L-x-xx	•	•	•	4	G 1/2"	G 1.1/4"	50	315	50	45	150	74,1	160°C
F2M6-L-x-xx	•	•	•	6	G 1/2"	G 1.1/4"	50	415	50	45	150	74,1	120°C
F2M6HT-L-x-xx	•	•	•	6	G 1/2"	G 1.1/4"	50	415	50	45	150	74,1	160°C
F2M8-L-x-xx	•	•	•	8	G 1/2"	G 1.1/4"	50	515	50	45	150	74,1	120°C
F2M8HT-L-x-xx	•	•	•	8	G 1/2"	G 1.1/4"	50	515	50	45	150	74,1	160°C
F2M10-L-x-xx	•	•	•	10	G 1/2"	G 1.1/4"	50	615	50	45	150	74,1	120°C
F2M10HT-L-x-xx	•	•	•	10	G 1/2"	G 1.1/4"	50	615	50	45	150	74,1	160°C
F2M12-L-x-xx	•	•	•	12	G 1/2"	G 1.1/4"	50	715	50	45	150	74,1	120°C
F2M12HT-L-x-xx	•	•	•	12	G 1/2"	G 1.1/4"	50	715	50	45	150	74,1	160°C

1.1/2" Manifold	Flow sensor range option (l/m)												
Part No.	0.5-10	1-20	2-40	Ports	A	A2	B	L	L1	L2	H	H2	Temp.
F2M4-XL-x-xx	•	•	•	4	G 1/2"	G 1.1/2"	50	365	50	70	161,5	85	120°C
F2M4HT-XL-x-xx	•	•	•	4	G 1/2"	G 1.1/2"	50	365	50	70	161,5	85	160°C
F2M8-XL-x-xx	•	•	•	8	G 1/2"	G 1.1/2"	50	565	50	70	161,5	85	120°C
F2M8HT-XL-x-xx	•	•	•	8	G 1/2"	G 1.1/2"	50	565	50	70	161,5	85	160°C
F2M12-XL-x-xx	•	•	•	12	G 1/2"	G 1.1/2"	50	765	50	70	161,5	85	120°C
F2M12HT-XL-x-xx	•	•	•	12	G 1/2"	G 1.1/2"	50	765	50	70	161,5	85	160°C

Comes in pairs of 2 manifolds
- One feed Manifold with Pressure and Tempature Sensor
- One return Manifold with Flow, Temperature and Pressure Sensor

Supplied without connector nipples (see page 93)
Ordering Example: Part No. + Flow sensor range (F2M4-1-20)

HT = High Temperature.
Complete unit with Pressure sensor installed on main inlet / return. Connect up to 4 manifolds to the touch screen in order to monitor uo to 48 separate cooling circuits.
Use the alarm limits (and output) on flow and temperature to control the process stability and part quality.

Material:
Stainless Steel

Digital Flow Regulator

Replace analogue water flow regulators with the new digital industry 4.0 ready monitors

PRESSURE
FLOW
TEMPERATURE

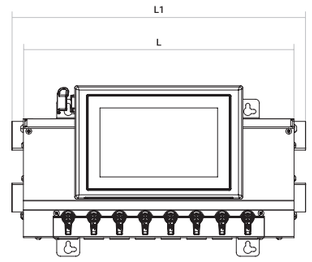

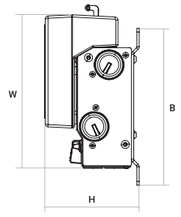

Part No.	Ports	Length mm	Length 1 mm	Width mm	Height mm	B mm	Flow	Temp.
FFRM4-0.5-10	4	220	250	200	123	205	0,5-10 l/m	120°C
FFRM4-1-20	4	220	250	200	123	205	1-20 l/m	120°C
FFRM4-2-40	4	220	250	200	123	205	2-40 l/m	120°C
FFRM6-0.5-10	6	287	317	200	123	205	0,5-10 l/m	120°C
FFRM6-1-20	6	287	317	200	123	205	1-20 l/m	120°C
FFRM6-2-40	6	287	317	200	123	205	2-40 l/m	120°C
FFRM8-0.5-10	8	354	384	200	123	205	0,5-10 l/m	120°C
FFRM8-1-20	8	354	384	200	123	205	1-20 l/m	120°C
FFRM8-2-40	8	354	384	200	123	205	2-40 l/m	120°C
FFRM10-0.5-10	10	421	451	200	123	205	0,5-10 l/m	120°C
FFRM10-1-20	10	421	451	200	123	205	1-20 l/m	120°C
FFRM10-2-40	10	421	451	200	123	205	2-40 l/m	120°C
FFRM12-0.5-10	12	488	518	200	123	205	0,5-10 l/m	120°C
FFRM12-1-20	12	488	518	200	123	205	1-20 l/m	120°C
FFRM12-2-40	12	488	518	200	123	205	2-40 l/m	120°C

Complete unit with Pressure sensor installed on main inlet. Retrofit your existing flow regulators with FloSense today.

Material:
Flow modules: DZR Brass / nickel plated / Cover: stainless steel.

Flow	Standard Sensor
Measuring range	0.5-10 l/min (0.13-2.64 gpm)
	1-20 l/min (0,27-5,2 gpm)
	2-40 l/min (0,53-10,4 gpm)
Accuracy	(± 1 o) in water, ± 1% FS

FLOW

Temperature	Standard Sensor
Measuring range	0-120°C (32-248°F)
Accuracy	15-90°C (59-194°F) ± 0.5 K
	0-120°C(32-248°F) ± 1 K

TEMPERATURE

Pressure	Standard Sensor
Measuring range	0-10 bar (0-145 psi)
Accuracy	± 2.5% FS

PRESSURE

Flosense 4.0 Manifold

PRESSURE
FLOW
TEMPERATURE

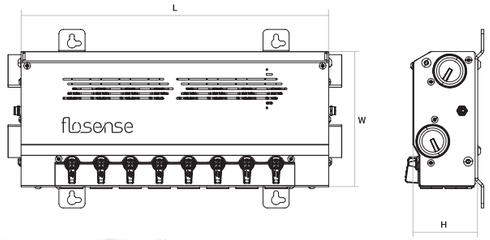

	Flow sensor range option (l/m)							
Part No.	0.5-10	1-20	2-40	Ports	L	W	H	Temp.
F4M4-x-xx	•	•	•	4	220	155	72	120°C
F4M4HT-x-xx	•	•	•	4	220	155	72	160°C
F4M6-x-xx	•	•	•	6	287	155	72	120°C
F4M6HT-x-xx	•	•	•	6	287	155	72	160°C
F4M8-x-xx	•	•	•	8	354	155	72	120°C
F4M8HT-x-xx	•	•	•	8	354	155	72	160°C
F4M10-x-xx	•	•	•	10	421	155	72	120°C
F4M10HT-x-xx	•	•	•	10	421	155	72	160°C
F4M12-x-xx	•	•	•	12	488	155	72	120°C
F4M12HT-x-xx	•	•	•	12	488	155	72	160°C

Ordering Example: Part No. + Flow sensor range (F4M4-1-20)

HT = High Temperature.
Complete unit with Pressure sensor installed on main inlet / return. Connect up to 4 manifolds to the touch screen in order to monitor uo to 48 separate cooling circuits.
Use the alarm limits (and output) on flow and temperature to control the process stability and part quality.

Material:
Flow modules: DZR Brass / nickel plated / Cover: stainless steel.

Flow	Standard Sensor	HT Sensor
Measuring range	0.5-10 l/min (0.13-2.64 gpm)	0.5-10 l/min (0.13-2.64 gpm)
	1-20 l/min (0,27-5,2 gpm)	1-20 l/min (0,27-5,2 gpm)
	2-40 l/min (0,53-10,4 gpm)	2-40 l/min (0,53-10,4 gpm)
Accuracy	(± 1 o) in water, ± 1% FS	(± 1 o) in water, ± 1% FS

FLOW

Temperature	Standard Sensor	HT Sensor
Measuring range	0-120°C (32-248°F)	0-160°C (32-320°F)
Accuracy	15-90°C (59-194°F) ± 0.5 K	15-90°C (59-194°F) ± 0.5 K
	0-120°C(32-248°F) ± 1 K	0-120°C (32-248°F) ± 1 K
		120-160°C (248-320°F) ± 2 K

TEMPERATURE

Pressure	Standard Sensor	HT Sensor
Measuring range	0-10 bar (0-145 psi)	
Accuracy	± 2.5% FS	

PRESSURE

Port Connector Plugs

Part No.	Connection	Size/series
09NRF	G 1/2"	09 EURO Style
13NRF	G 1/2"	13 EURO Style
20NRF	G 1/2"	20 Int. Style
30NRF	G 1/2"	30 Int. Style
08NRF	G 1/2"	French Type
F9NRF	G 1/2"	French Matic
06NRF	G 1/2"	06 Scandinavian Style
10MF	G 1/2"	10 mm Hosetail
13MF	G 1/2"	13 mm Hosetail
19MF	G 1"	19 mm Hosetail
25MF	G 1"	25 mm Hosetail
38MF	G 1"	38 mm Hosetail

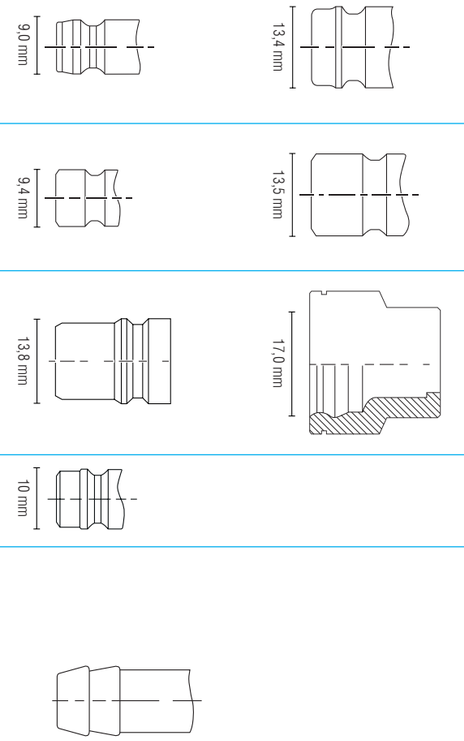

Extension Cable

Part No.	Connection	Length (mm)
FS-3P-EC1000	M8/M8/3P	1000
FS-3P-EC2000	M8/M8/3P	2000
FS-3P-EC5000	M8/M8/3P	5000
FS-3P-EC10000	M8/M8/3P	10000

Blanking Plug

Part No.	Connection	Seal
SSEC1	G 1"	FKM
SSEC1-1/4	G 1/4"	FKM
DR1-1/2	G 1/2"	FKM

IQ CONCEPT

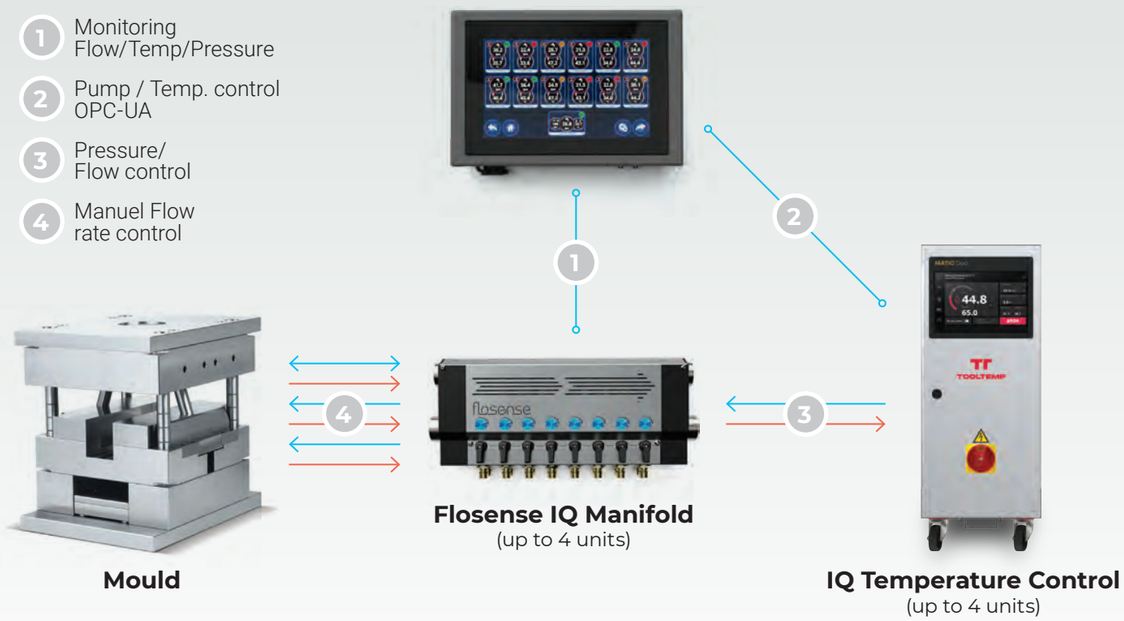

flow temperature pressure

FLOSENSE IQ
The Flosense IQ software continuously adjusts the speed of the pump in the temperature control units (TCU) to be aligned with the demand to reach optimal thermal properties. The ideal benchmark is the Delta-T (Temp out – Temp in) and if the Delta-T is too high or low, then the flow rate will be changed (pump speed) to optimize the heat transfer rate.

ENERGY REDUCTION
Trials show that energy consumption can be reduced by up to **85%** by using IQ controls in connection with TCU's with variable speed pump instead of using standard TCU's without pump control.

HOW IT WORKS
Flosense IQ monitor **(1)** the temperature and flow rates in each single circuit (up to 48) of the manifolds and calculates the demand for cooling water. This information is transferred to the temperature control unit **(2)**, which adjust the pump speed to the required demand **(3)**.

FINE REGULATION
Individual fine regulating valves **(4)** on the manifold allow the operator to adjust the individual flowrate on each circuit. This is typically required if Delta-T or flow rate vary significantly between circuits on same distribution manifold. The result is a perfectly balanced thermal process with minimum use of energy.

Flosense Cart

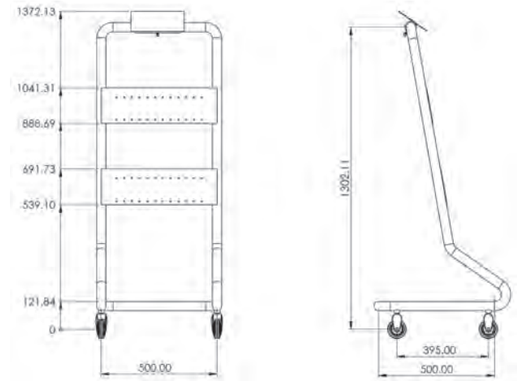

Part No.	# Manifolds	# Zones	Height (mm)	Width (mm)
FS-C-100	2	24	1400	500

Description
Flosense Cart ideal for flexible termal diagnostics. Equipped with wheels for easy mobility.
Material: Stainless Steel.

Note: The Cart is supplied without Flosense manifolds or Touch Screen.

Digital Flow Monitors p. 73
Analogue Flow Meters p. 86
De-Scaling p. 89
Pressure Testing p. 91
Water Treatment p. 91
Filters p. 92
Valves with Filters p. 94

Vortex Digital Single Zone Monitor

Part No.	Flow capacity	Connection	Voltage
SZ-120	1-20 l/m	G 1/2	18..30DC
SZ-240	2-40 l/m	G 1/2	18..30DC
SZ-5100	5-100 l/m	G 3/4	18..30DC

- Integrated temperature measurement
- Flow measurement
- Limit setting of flow and temperature
- Alarm output signal
- Rotatable display
- Temperature range from -10°C to 90°C

Material: Stainless steel body and connection
Pressure: 12 bar
Temperature: from -10 to +90 C°
Protection class: IP 65/IP67.

Wall Plug Power Supply

Part No.	Voltage input	Voltage output
SZ-P230	100-240V.	24 V.

Kit including: wall plug cable, power supply and M12 Connector cable.

Power and Data Cable M12

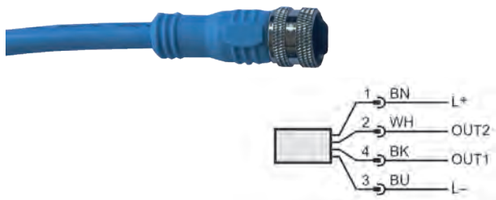

Part No.	Length	Connection	Voltage range
SZC-3000	3 m.	M12	24DC

Flow Indicator

Part No.	Flow Rate H²O LPM Min	Max	Length	Ø mm	Thread	AF	Max Pressure (bar)
CFV1BN	1	10	59	25	G 1/4"	19	10
CFV2BN	2	20	59	25	G 3/8"	24	8
CFV3BN	3	30	71	30	G 1/2"	24	8
CFV4BN	4	40	106	47	G 3/4"	40	5
CFV5BN	6	60	106	47	G 1"	40	5

Use:
The CFV impeller flow indicators are generally used to monitor the correct flowing and circulation of a fluid into a pipeline. They are ideal for cooling and heating circuits, water treatment, and plastics processing equipment.

Note:
Flow rates refer to a vertical mounting with fluid inlet upwards.

Specifications:
Body: Nickel-plated brass
Impeller: Red Hostaform
Glass: Pirex
Seals: NBR
Max temperature: 90°C

Digital Flow Monitors p. 73
Analogue Flow Meters p. 86
De-Scaling p. 89
Pressure Testing p. 91
Water Treatment p. 91
Filters p. 92
Valves with Filters p. 94

Premium Waterflow Regulator

Note! Supplied without fittings

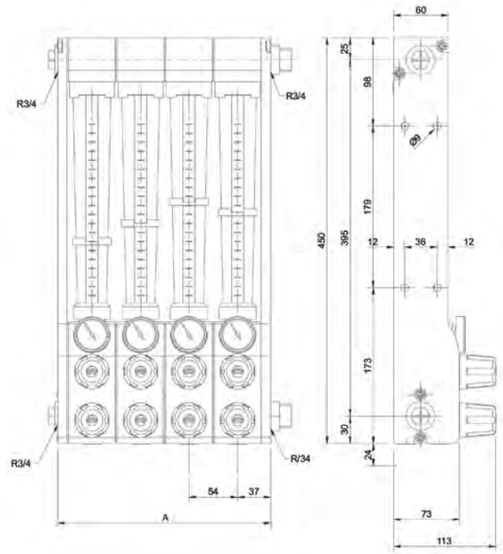

Part No.	Main Connections inlet / oulet	Max.Temp.	Zones	Zone Connection	A (mm)
MPR02R	G 3/4"	90°C*	2	G 3/8"	126
MPR04R	G 3/4"	90°C*	4	G 3/8"	231
MPR06R	G 3/4"	90°C*	6	G 3/8"	339
MPR08R	G 3/4"	90°C*	8	G 3/8"	444
MPR10R	G 3/4"	90°C*	10	G 3/8"	552
MPR12R	G 3/4"	90°C*	12	G 3/8"	659

* Temperature vs Pressure: 8 bar 40°C, 7 bar 60°C, 5 bar 80°C, 4 bar 90°C

Water flow regulators are ideal for regulating the flow rate of water passing through them as well as the water outlet temperature.
The high quality construction and design make the unit one of the most competitive.

Technical characteristics
- The tube is made of Polyamide (standard).
- Zone Flow Capacity 0-18 L/M
- Interior and exterior bodies are made of PA 6 with 30% fibre glass.
- Brass regulating taps.
- Thermometers (standard).
- Stainless steel interior tie-rods.
- Vitrilic rubber o-rings (hardness: 70 SHA).

Temperature: 90°C max
Pressure: 8 bars
Flow rate: 18 l/m (zone)
Fluid: Water

Digital Flow Monitors	p. 73	Water Treatment	p. 91
Analogue Flow Meters	**p. 86**	Filters	p. 92
De-Scaling	p. 89	Valves with Filters	p. 94
Pressure Testing	p. 91		

Spare Part List

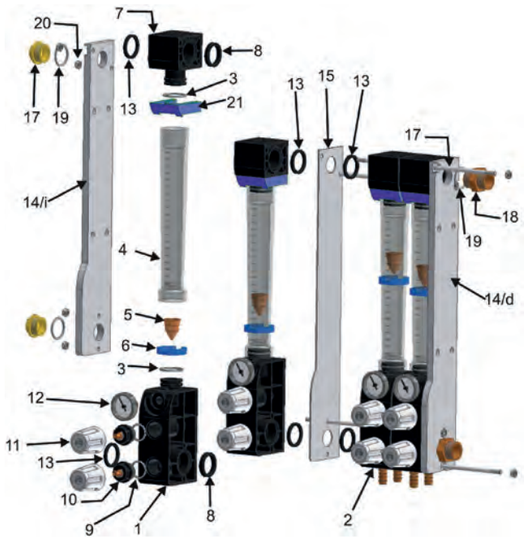

No	Part No.	Description
1	**MPR-S-1**	Inferior body 3/8 BSP connections
2	**MPR-S-2**	Inferior body with pipes
3	**MPR-S-3**	Tube O-ring
4	**MPR-S-4**	Polyamide tube
5	**MPR-S-5**	Brass
6	**MPR-S-6**	Level clip
7	**MPR-S-7**	Superior body
8	**MPR-S-8**	Intermediate o-ring
9	**MPR-S-9**	Tap O-ring 21x3
9.1	**MPR-S-9.1**	Tap O-ring Ø6x2
10	**MPR-S-10**	Tap
11	**MPR-S-11**	Knob
12	**MPR-S-12**	Thermometer
13	**MPR-S-13**	End O-ring / left 28x35x3,5
14 d	**MPR-S-14d**	Right aluminium end plate
14 i	**MPR-S-14i**	Left aluminium end plate
15	**MPR-S-15**	Intermediate plate
17	**MPR-S-17**	Plastic cap
18	**MPR-S-18**	3/4" brass connector (optional)
20	**MPR-S-20**	Nut
21	**MPR-S-21**	Tube security clip
22	**MPR-S-22**	End O-ring / right 28x35x5,5

Digital Flow Monitors	p. 73	Water Treatment	p. 91
Analogue Flow Meters	p. 86	Filters	p. 92
De-Scaling	**p. 89**	Valves with Filters	p. 94
Pressure Testing	p. 91		

De-Scaling Pump - With Flow Reverser

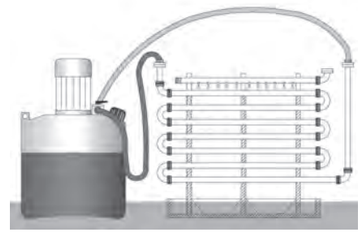

Part No.	Tank Capacity	Flow Rate	Reverse system	Fittings	HP
DP15M	15 l.	33 l/min.	Manual	0,2	0,2
DP15A	15 l.	33 l/min.	Automatic	0,17	0,17
DP30M	24 l.	39 l/min.	Manual	0,45	0,45
DP30A	24 l.	44 l/min.	Automatic	0,45	0,45
DP40S	40 l.	102 l/min.	Manual-Superflush*	G 1"	0,75
DP100M	100 l.	39 l/min.	Manual	G 1/2"	0,45

Used for clearing blocked or badly corroded heating and cooling circuits on Injection Moulding Machines and Moulds. Even when not blocked a relatively thin layer of scale or corrosion can act as an insulator and have a huge impact on the efficiency of your circuit. Simply fill up the pump with the descaling fluid, connect the pump to the inlet and outlet of the circuit and turn on the pump. Regular reversal of flow direction, either manual or automatic, speeds up operation and assists in dislodging any solid matter present in pipework and cooling circuits.

By using the pump together with the recommended range of descaling fluids to remove both rust and limescale deposits. The descaling fluid contains a colour change indicator to monitor performance; the translucent tank means that the user can see when the red colour runs clear and is no longer effective. Use the neutralising fluid to create a pH neutral fluid which can be easily disposed of.

*Superflush is a feature that allow fresh water flush facility - ideal for high flow rate cleaning process and easy filling of tank and wate circuit. DP40S is a 2 in 1 solution that can work both as a traditional descaling pump or as a high flow flushing pump.

Easy, safe and professional maintenance of mould cooling circuits and temperature controllers

- Compact and portable
- Safe and easy to use
- Flow reversing system
- Full range of cleaning products available
- 6 models available to suit your application

Mould Cooling circuits which are corroded or partly blocked by scale cause:

- Reduced flow
- Reduced efficiency
- Longer cycle times
- Temperature problems
- Increased maintenance
- Faulty parts

Automatic Reverser Manual Reverser

Cooling pipe with Scale build-up

Fig. 1 Clockwise circulation Fig. 2 Counterclockwise circulation

Digital Flow Monitors	p. 73	Water Treatment	p. 91
Analogue Flow Meters	p. 86	Filters	p. 92
De-Scaling	**p. 89**	Valves with Filters	p. 94
Pressure Testing	**p. 91**		

De-Scaling Solution

Part No.		kg	Weight	Copper	Steel	Stainless Steel	Aluminium	Brass	Tin	Light alloys	Galvanised Iron
Descaling Chemicals											
RL10	Remover Liquid	10	10 kg	•	•			(•)			
RL10P	Remover Plus Liquid	10	10 kg	•	•			(•)			
RP10	Remover Plus Powder	10	10 kg			•	•	•	•	•	
Neutralizing Chemicals											
NP10	Neutralizer	10	10 kg	•	•	•	•	•	•	•	•

Remover Liquid
Concentrated descaling liquid with powerful reaction for systems and heat exchangers.

Remover Plus Liquid
Concentrated descaling liquid (non-fuming), with degreasing action, for systems and heat exchangers.

Remover Plus Powder
Concentrated descaling powder (non-corrosive, non-fuming) for systems and heat exchangers.

Neutralizer
Neutralizing powder to remove residual acidity after descaling systems and heat exchangers. Also suitable for neutralizing descaling chemicals after use, thus making it possible to drain them.

Pressure Test Unit

Part No.	Pressure (BAR)	Connection	Weight
MP-60	0-60	G 1/2"	5,5 kg

Pressure test unit - for easy leakage test of Mould circuits.
Supplied with connecting hose and water tank.

Digital Flow Monitors	p. 73	**Water Treatment**	**p. 91**
Analogue Flow Meters	p. 86	Filters	p. 92
De-Scaling	p. 89	Valves with Filters	p. 94
Pressure Testing	p. 91		

Corrosion, Scale and Biological Inhibitors

Performance Properties

Mouldpro Inhibitors have been specially formulated with Ethylene Glycol for use as an Industrial Grade additive for use in Mould Cooling and Heating systems.

ThermaFlo DTX-25
Ethylene based

Optimum Flow:	Improved heat transfer characteristics, including; lower Dynamic Viscosity and higher Thermal Conductivity.	☒
Protection:	Contains synergistic corrosion inhibitors to protect metals commonly found in mould cooling systems.	☒
Biodegradable:	Mixtures are readily biodegradable (90% over ten days) and will not remain in the environment or bio-accumulate.	☒
Scale Protection:	Contains scale and biological inhibitors to help prevent fouling - thus promoting long operational life and high thermal efficiency.	☒
Non Toxic:	Has an toxicity rating: "Relatively Harmless" as confirmed by the Hodge & Sterner Scale.	☒

Part No.	Type	Temperature range	Container size
DTX-25	Ethylene	-50 to +140°C	25 Ltr

Refractometer

Part No.	Scale	Ethylen Glycol	Propylene Glycol	Accuracy
RFM-200ATC	Brix	Yes	Yes	±0,1%

Includes
Ethylene Glycol: -60°C - 0°C / 0-66.6%.
Propylene Glycol: -50°C - 0°C / 0-62.4%.
Simple, accurate and repeatable measurement of concentration of glycol antifreeze with Automatic. Temperature Compensation (ATC).
Includes calibration screwdriver, and case.

PH Test Paper - Alkaline Acid Indicator

Part No.	PH scale	Length	
DP-PH-PAPER	1-14	5 m.	1

Alkaline Acid Indicator Meter- Ph Test Paper.
FEATURES: With Distinct Color PH Scale for Result Comparisons. The Test Strip Color Changes Must Be Matched with the PH Scale Color Chart Within About 15 Seconds. Quick and Easy to Use. Provides Reliable and Accurate PH Readings. Easy to Carry. Appropriate for Testing Alkaline or Acid Level of Any Liquid.
Scale Reads From 0 to 14: 0 - 3 Indicates a Very Acidic Substance 4 - 6 Indicates an Acidic Substance 7 Indicates Neutral 8 - 11 Indicates Alkalinity 12 - 14 Indicates a Very High Level of Alkalinity

Stainless Steel In-Line FIlter - MPF-80-200

Base Unit

Part No.
MPF-80-200

Maintenance indicator (optional)

Part No.
MPF-M

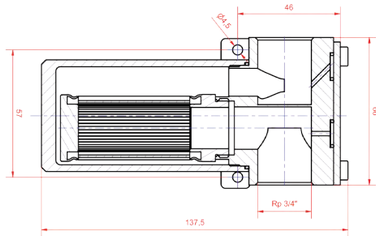

Dirt particles in coolants often result in blockages in small cooling channels and can render mould inserts useless. This maintenance friendly Mouldpro stainless steel in-line filter MPF-80-200 offers superior low cost protection against foreign body particles, in particular for conformal cooling channel of injection moulding tools.

The filter can be flanged to the mould or operated in conjunction with temperature control units.

Sure protection of your temperature cooling channels
High filter performance is based on a starshaped folded stainless steel sieve that prevents the ingress of all particles of >200 μm into the cooling channel.

Versatile use
The filter is suitable for use with water- or oil-based coolants with a flow volume of up to 80 l/min and offers versatile application possibilities within a temperature range of -10 to 260°C.

Simple maintenance
A maintenance friendly concept allow easy removal of the filter insert, which can be cleaned with compressed air, in an ultrasound bath or by means of a high pressure cleaner. The filter housing remains in the system circuit.

The MPF-80-200 can be supplied with an optional maintenance indicator.

All advantages at a glance:
- Low cost with high filter performance
- Simple maintenance and cleaning
- Suitable for high flow volumes
- Large temperature range

Filter insert

Part No.
MPF-F

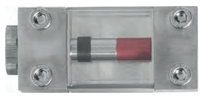

Maintenance indicator

Part No.
MPF-M

O-Ring

Part No.
MPF-O

Technical data	
Material	Stainless steel 1.4305
Connection thread	G 3/4“
Coolant	Water / oil
Pressure range	PN 16
Operating temperature	-10°C / 260°C
Seal	PTFE
Dimensions	76 x 56 x 131 mm (L x W x H)
Weight	approx. 1.3 kg

Design according to:
Pressure Equipment Directive 97/23/EU, pressure equipment type acc. to Art.
1: container, fluid acc. to Art. 9: group
2: others acc. to Art. 3, para.
3: good engineering practice, suitable for max. 1,000 full cycle motions.

Filter insert	
Material	Stainless steel 1.4305, adhesive-free, rolled
Mesh width	200 μm
Filter surface	approx. 150 cm²
Connection	Thread connector
Dimensions	Ø 32 X 76 mm

Maintenance indicator (optional)	
Principle	Differential pressure measurement
Seal	PTFE O-ring
Dimensions	45 x 30 x 66 mm (L x W x H)

O-Ring	
Material	PTFE
Dimensions	Ø 45 X 1.5 mm

Inline filters specially designed for cooling channels or core cooling channels.
The filter cartridge removes dirt particles, rust, or scale deposits.
The temperature filter is made of stainless steel and brass. Easy maintenance of the filter:

1. Separate the 2 housing parts
2. Clean filter in an ultrasonic bath
3. Re-assemble the 2 housing parts

Inline Filter

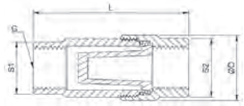

Part No.	Ø D	G	S1	S2	L	Filter area mm²
ILF-R1/4	20	G 1/4"	16	18	48	660

Spare filter: SF-R1/4

Inline Filter - with Maintenance Indicator

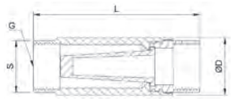

Part No.	Ø D	G	S	L	Filter area mm²
ILF-R3/4-M	32	G 3/4"	29	93,5	2500

Spare filter:	SF-R3/4
Pressure loss:	10-15%
Operating temperature:	Max 140 degrees
Max. Pressure:	8 bar
Pore size (filter):	100 μm
Material:	Stainless steel
Seals:	FKM

Inline Filter

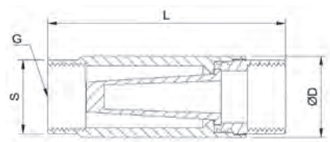

Part No.	Ø D	G	S	L	Filter area mm²
ILF-R3/4	32	G 3/4"	29	93,5	2500

Spare filter: SF-R3/4

Y-Strainer - ISO 228

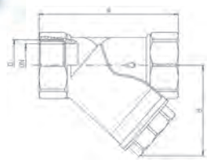

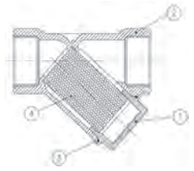

Part No.	D	DN	A	B	
Y100-1/4	G 1/4	8	55	40	1
Y100-3/8	G 3/8	10	55	40	1
Y100-1/2	G 1/2	15	58	40	1
Y100-3/4	G 3/4	20	70	48	1
Y100-1	G 1	25	87	56	1
Y100-1-1/4	G 1-1/4	32	96	64	1
Y100-1-1/2	G 1-1-1/2	40	106	73	1

	Part description	Material	
1	End-cap	CW617N	1
2	Body	CW617N	1
3	O-ring	NBR	1
4	Stainless steel strainer	AISI 304	1

Quality
- Suitable for industrial, pneumatic and hydraulic installations

Body
- Hot forged CW617N brass body
- Stainless steel (1.4301 / AISI 304) filter
- Degree of filtration: 1/4” through 2” 500 μm, 2 1/2”, 3”, 4” 800 μm

Threads
- ISO 228/1 female by female parallel threads and inspection plug

Working pressure & temperature
- 20 bar up to 2”, 16 bar over 2” non-shock cold working pressure
- -20°C to +110°C (-4°F to +230°F) in absence of steam

WARNING: freezing of the fluid in the installation may severely damage the valve.

Digital Flow Monitors	p. 73	Water Treatment	p. 91
Analogue Flow Meters	p. 86	Filters	p. 92
De-Scaling	p. 89	**Valves with Filters**	**p. 94**
Pressure Testing	p. 91		

Ball Valve with Integrated Filter

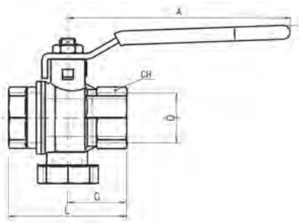

Part No.	D	L	G	A	CH
BVF1/2	G 1/2"	50,7	26,7	100	25
BVF3/4	G 3/4"	61,3	32,3	100	31
BVF1	G 1"	70,1	35,6	100	38
BVF1-1/4	G 1.1/4"	85	45	158	48
BVF1-1/2	G 1.1/2"	97,5	52	158	54
BVF2	G 2"	117	63	158	66

Ball Valve with Integrated Filter and Magnet

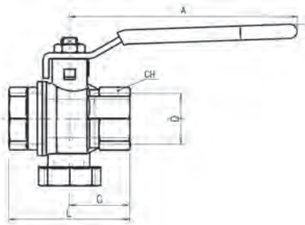

Part No.	D	L	G	A	CH
BVFM3/4	G 3/4"	61,3	32,3	100	31
BVFM1	G 1"	70,1	35,6	100	38
BVFM1-1/4	G 1.1/4"	85	45	158	48
BVFM1-1/2	G 1.1/2"	97,5	52	158	54
BVFM2	G 2"	117	63	158	66

Quality:
- Substitutes 3 different components (2 ball valves and one filter)
- Reduces leakage risks due to lower sealing points
- Cost saving due to reduced number of components
- Time saving at installation and maintenance
- Built-in vertical filter with cartridge structure in AISI304 + Nylon (filtration degree: 500 microns / 35 mesh). Size ½" has a central rib to ease filter extraction.
- Final test conforming with UNI EN 12266-1 points A3 / A4 (for 1.½" and 2" sizes: acc. to directive 2014/68/UE)
- No metal-to-metal moving parts
- Handle clearly shows ball position
- Chrome plated brass ball for longer life
- Handle stop on body to avoid stress at stem

Body:
- Hot forged sand blasted, external nickel plated brass body and cap sealed with Loctite® or equivalent thread sealant
- Finest brass according to EN 12165 and EN 12164 (formerly DIN 17660 and UNI 5705-65) specifications
- Bottom plug for an easy filter maintenance

Stem:
- Blowout-proof unplated brass stem
- Two O-rings at the stem (FKM + NBR) for maximum safety

Sealing:
- Pure PTFE seats

Threads:
- ISO 228 parallel female by female threads

Flow:
- Nominal port

Handle:
- Zinc plated steel handle with plastic dip coating
- WARNING: do not exceed reasonable temperature and/or electrical load

Magnet:
- Neodymium (12.000 gauss) NdFeB

Working pressure & temperature:
- 30 Bar (450 PSI) non-shock cold working pressure for sizes ½" to 1", 20 Bar (290 PSI) for sizes 1.¼" to 2"
- -20°C / +150°C (-4°F / +300°F)
- WARNING: freezing of the fluid in the installation may severely damage the valve

PED directive:
- According to 2014/68/UE, 1.¼" and superior sizes cannot be used with dangerous fluids

Cost Saving Solution

BVF Filter Valve substitues traditional Y Strainers combined with 2 ball valves.

- Full port
- Low pressure drop
- Assembly space and time very limited
- Easy to be cleaned and maintained
- All impurities gather inside the filter
- Maximum pressure 30 bar (PN30)
- Increased filter quality with cartridge structure for all sizes. Filter for size 1/2" will have a central rib to ease filter extraction

97 Mould Cleaning
101 Absorbents
102 Mould Protection
104 Mould Release
106 Mould Lubricant
109 Nano Mould Coating
110 Purging Compound

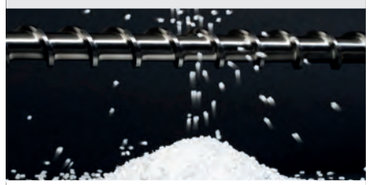

Mould Cleaning p. 97
Absorbents p. 101
Mould Protection p. 102
Mould Release p. 104
Mould Lubricant p. 106
Nano Mould Coating p. 109
Purging Compound p. 110

INDUSTRIAL WATER BASED CLEANER / DEGREASER

A safe, water-based product for effective cleaning and degreasing of machine parts, tools and mould surfaces quickly, safely and efficiently.

Industrial strength ready-to-use cleaner, supplied in a trigger spray bottle and perfect for manufacturing organisations; particularly in the food and medical industry (NSF A1).

Features and Benefits:
- Ready-to-use (does not require dilution)
- Safe to use, no protective clothing required
- No ADR and storage restrictions
- Aerosol Free 750 ml trigger spray, no propellant
- Non-flammable and biodegradable
- 100% easily recyclable plastic container & trigger

Quickly and effectively removes contamination, such as grease residue, used oil, hydrocarbons, graphite, ink, tar, polymers, polystyrene, glue, wax and bitumen.

Contains Micro emulsion package for heavy-duty degreasing and cleaning, the surfactants fulfil the requirements for EU Eco Label.

Nonfood Compounds
Program Listed A1
Registration 170899

Industrial Water Based Cleaner / Degreaser

	Part No.	Description	Size	
NSF	MAC750FG	Aqua Cleaner	750 ml / 27 oz	8

MOULD CLEANERS

Mould Cleaning	**p. 97**	Mould Lubricant	p. 106
Absorbents	p. 101	Nano Mould Coating	p. 109
Mould Protection	p. 102	Purging Compound	p. 110
Mould Release	p. 104		

Mould Cleaner/Degreaser

CLEAN

	Part No.	Description	Size	
	MCD501	Mould Clean - Fast drying	500 ml / 18 oz	12
NSF	**MCD501FG**	Mould Clean - Fast drying	500 ml / 18 oz	12

Cleaning agents remove plastic residue from moulds and dies including residues caused by cracking, for example. They provide for time-saving production processes, for dimensional accuracy of plastic parts and mouldings, for flawless surface structure and also preserve machine components.

Features
- Degreaser for removing oil, grease and wax residues from moulds.
- Supplied in aerosol form, all aerosols are free of fluorocarbons.

Mould Citrus Cleaner/Degreaser

CLEAN

Part No.	Description	Size	
MCD551	Citrus Degreaser - Slow drying	500 ml / 18 oz	12

Citrus Based Solvent Degreaser. High performance citrus based cleaning solvent. An ideal alternative to traditional chlorinated or highly volatile solvent cleaners. Slow drying which allows maximum cleaning results.

Features
- Natural based, high performance cleaner/ degreaser.
- Fully biodegradable.
- Deep penetrating action.
- Classified as non-flammable.
- Safe on metals and most plastics.
- Effective on a wide range of soiling such as oil, grease, tar, bitumen, silicones, rubber-based adhesives, oil-based paints, inks and dye.
- Pleasant orange Citrus odour.

Mould Cleaner/Polymer Remover

CLEAN

Part No.	Description	Size	
MPR501	Mould Clean Polymer Remover	500 ml / 18 oz	12

Cleaning agents remove plastic residue from moulds and dies including residues caused by cracking, for example. They provide for time saving production processes, for dimensional accuracy of plastic parts and mouldings, for flawless surface structure and preserve machine components.

Features
- Designed to remove polymer deposits, plastic, antisoluble resins, grease and oils.
- Water soluble.
- Highly active organic cleaner.
- Supplied in aerosol form, all aerosols are free of fluorocarbons.

Heavy Duty Polymer Remover

CLEAN

	Part No.	Description	Size	
NSF	**MPR502FG**	Heavy Duty Mould Clean Polymer Remover	500 ml / 18 oz	12

Heavy Duty Cleaning agents remove plastic residue from moulds and dies including residues caused by cracking, for example. They provide for time saving production processes, for dimensional accuracy of plastic parts and mouldings, for flawless surface structure and preserve machine components.

Features
- Designed to remove polymer deposits, plastic, antisoluble resins, grease and oils.
- Water soluble.
- Highly active organic cleaner.
- Supplied in aerosol form, all aerosols are free of fluorocarbons.

Anti-Static Surface Foam Cleaner

CLEAN

	Part No.	Description	Size	
	MFC501	Foam Cleaner	500 ml / 18 oz	12
NSF	**MFC502FG**	Foam Cleaner	500 ml / 18 oz	12

Mouldpro Foam Cleaner is a unique anti-static foaming cleaner based on a blend of surfactants, solvents, inhibitors and water.

Features
- Unrivalled in aperformance.
- Quickly and easily removes all types of dirt, grease, stains, soiling and other contamination from hard surfaces.

Mould Cleaning	**p. 97**	Mould Lubricant	p. 106
Absorbents	p. 101	Nano Mould Coating	p. 109
Mould Protection	p. 102	Purging Compound	p. 110
Mould Release	p. 104		

Mould Cleaner Wipes

Part No.	
WMC80	1

Mould Cleaner Wipes are specifically developed for cleaning and degreasing of mould surfaces.

Features
- Ultra-low linting non-abrasive wipe.
- Leaves no residues.
- Supplied in tub of 80 wipes.

Rust Remover Wipes

Part No.	
WRR80	1

A tough textured wipe impregnated with citric acid cleaners to remove rust and other oxides from ferrous metal surfaces. Using a non-hazardous chemical and a tough, textured wipe material the product provides an effective alternative to traditional hazardous nitrate based chemicals used for rust removal.

Features
- Supplied in tub of 80 wipes.

Multi Wipes

Part No.	
WMW100	1

Ideal for the quick and easy clean-up of hands, tools and machine surfaces. The heavy duty Multi Wipe material is impregnated with a hi-tech cleaning solution that contains antibacterial properties for fast removal of dirt, oil, grease, adhesives, varnishes, scuff marks, wet paint, mastic and expanding foam. Multi Wipes combine high performance with minimal hazard to the user and the environment.

Features
- Contains no white spirits or other harmful solvents.
- Wipes contain antibacterial properties certified to BSEN1276 Standard.
- Supplied in tub of 100 wipes.

Mould Cleaning	p. 97	Mould Lubricant	p. 106
Absorbents	**p. 101**	Nano Mould Coating	p. 109
Mould Protection	p. 102	Purging Compound	p. 110
Mould Release	p. 104		

Maintenance Socks

Part No.	Size	Pack Absorbency	
MMS120	8cm x 120cm	75L	1

Features
- Suitable for oil and water
- Size, 8cm x 120cm
- Pack absorbency, 75l
- 15 Socks

Maintenance Roll

Part No.	Size	Pack Absorbency	
MMR40	50cm x 40m	76L	1

Features
- Suitable for oil and water
- Size 38cm x 46m
- Pack absobency 76l
- 1 roll

Maintenance Pads

Part No.	Size	Pack Absorbency	
MMP100	40cm x 50cm	85L	1

Features
- Suitable for oil and water
- Size, 40cm x 50cm
- Pack absorbency, 85l
- 100 Pads

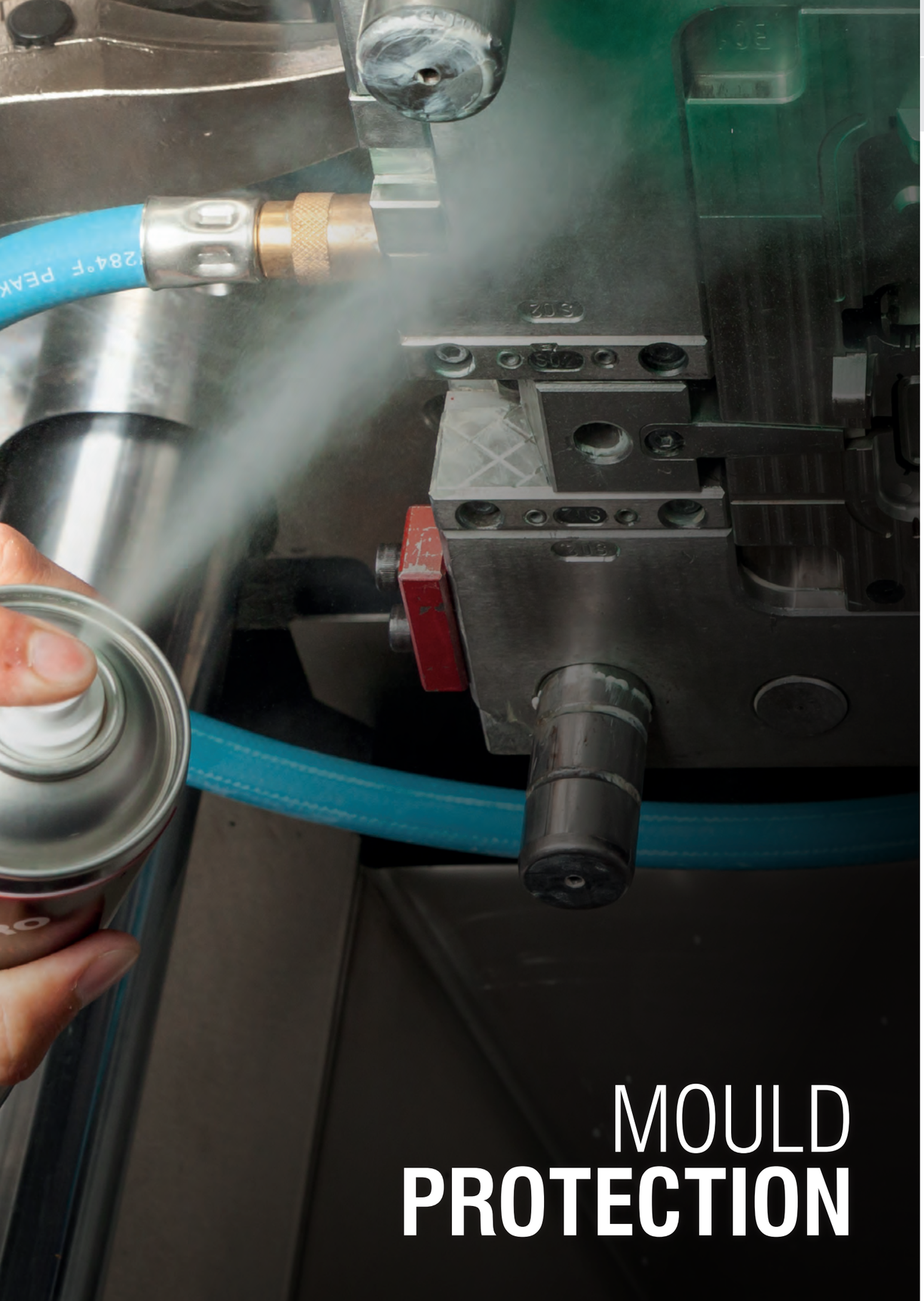

MOULD PROTECTION

Mould Cleaning	p. 97	Mould Lubricant	p. 106
Absorbents	p. 101	Nano Mould Coating	p. 109
Mould Protection	**p. 102**	Purging Compound	p. 110
Mould Release	p. 104		

Mould Protect, Green

PROTECT

Part No.	Description	Size	
MPG501	Mould Protect Green	500 ml / 18 oz	12

Anti-corrosion agents provide dismantled dies, moulds and parts with long-term protection against corrosion. This ensures that your mould is always ready for use, maintaining value and efficiency.

Features
- Wax-type anti-corossion agents - it is not necessary to remove the protective film prior to use.
- This agent does not creep.
- Supplied in aerosol form, free from fluorocarbons.

Mould Protect Wax, Clear

PROTECT

	Part No.	Description	Size	
	MPW501	Mould Protect Clear	500 ml / 18 oz	12
NSF	**MPW501FG**	Mould Protect Clear	500 ml / 18 oz	12
NSF	**MPB501FG**	Mould Protect Blue	500 ml / 18 oz	12

Anti-corrosion agents provide dismantled dies, moulds and parts with long-term protection against corrosion. This ensures that your mould is always ready for use, maintaining value and efficiency.

Features
- Wax-type anti-corrossion agents - it is not necessary to remove the protective film prior to use.
- This agent does not creep.
- Supplied in aerosol form, free from fluorocarbons.

Mould Protect, Long Term with Acid Neutraliser (PVC Moulding)

PROTECT

	Part No.	Description	Size	
NSF	**MPP501**	Mould Protect - Long Term	500 ml / 18 oz	12

Long Term anti-corrosion agent, for mould and dies. Sticks to the surface and is a rust preventive agent that offers protection against moisture corrosion and oxidation caused by the presence of hydrochloric acid.

Features
- Corrosion and oxidation agent
- Acid Neutraliser action
- Ideal for PVC Moulding

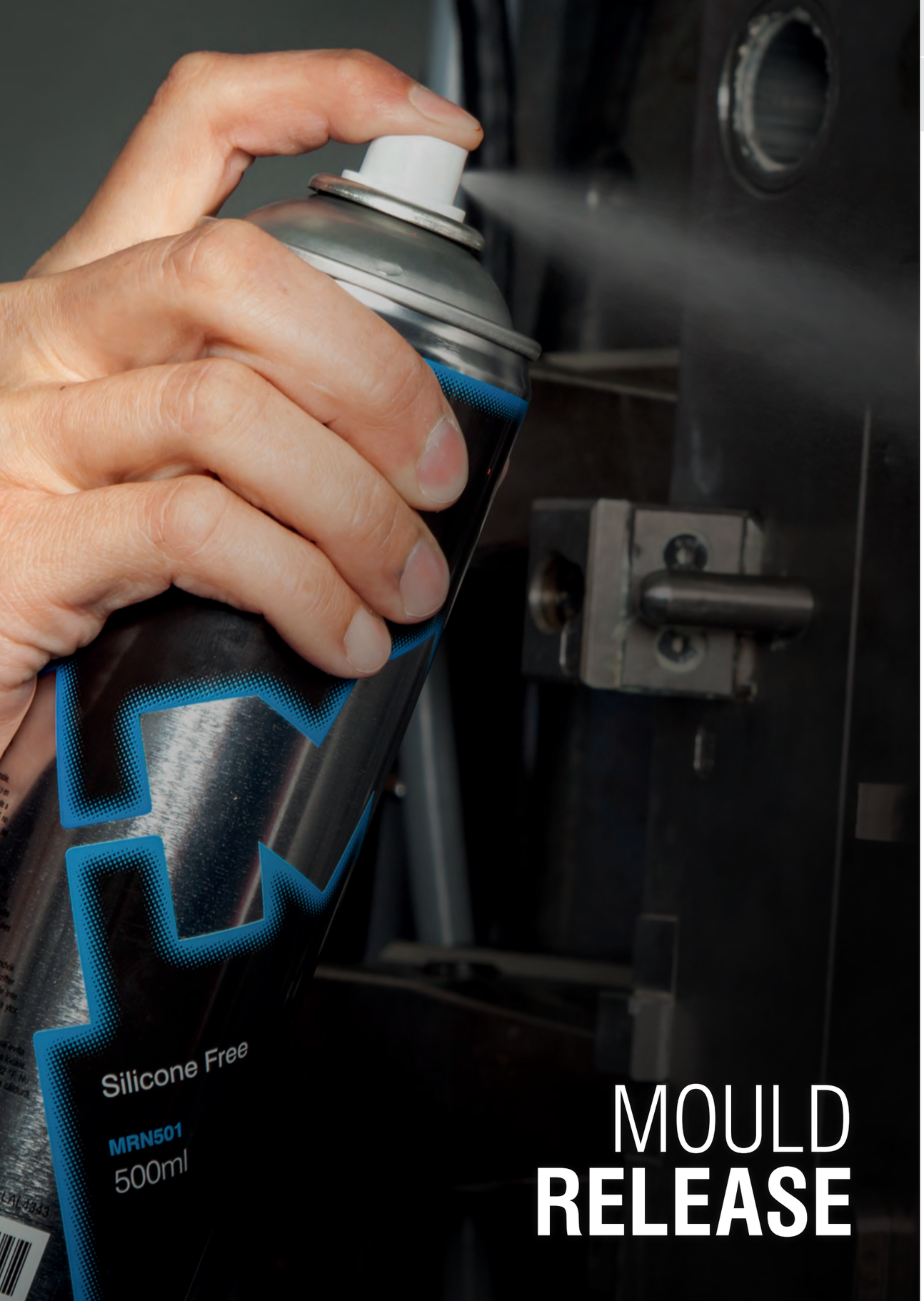

MOULD RELEASE

Mould Cleaning	p. 97	Mould Lubricant	p. 106
Absorbents	p. 101	Nano Mould Coating	p. 109
Mould Protection	p. 102	Purging Compound	p. 110
Mould Release	**p. 104**		

Mould Release, Silicone Free

RELEASE

	Part No.	Description	Size	
	MRN501	Mould Release Silicone free	500 ml / 18 oz	12
NSF	**MRN501FG**	Mould Release Silicone free	500 ml / 18 oz	12

Universal release agent on a base of synthetic oils.

Features
- A high quality proven release agent that ensures trouble free moulding.
- Saves time, shortens cycle times, reduces scrap and is gentle on dies and moulds.
- Suitable for thermoplastic or thermoset moulding.

Mould Release, Silicone

RELEASE

Part No.	Description	Size	
MRS501	Mould Release Silicone	500 ml / 18 oz	12

Universal release agent on a base of silicone.

Features
- A high quality proven release agent that ensures trouble free moulding.
- Saves time, shortens cycles times, reduces scrap and is gentle on dies and moulds.
- Suitable for thermoplastic or thermoset moulding.

Mould Release, Zinc Sterate

RELEASE

Part No.	Description	Size	
MRZ501	Mould Release, Zinc Sterate	500 ml / 18 oz	12

Dry powder based Mould Release with excellent anti-stick properties, perfect for moulded plastics and rubber parts.
Marking-free, non-staining and ideal for parts to be painted or plated.

Features
- Dry Powder based.
- Anti-stick properties.
- Ideal for Rubber and Polyurethane moulding

Mould Polish

POLISH

	Part No.	Description	Size	
NSF	**MCP080FG**	Mould Polish Paste	80 ml.	1

This superior, quality Mould polish is perfect for cleaning and polishing steel moulds. It safely and easily removes oxidation, corrosion, stains, and rust. It produces a brilliant reflective luster and leaves an invisible protective coating to ensure a long-lasting shine.

Spray Can Holder

Part No.	Number of cans	Length	
MCH02	2	170 mm	1
MCH03	3	250 mm	1
MCH04	4	330 mm	1

Material: Stainless Steel

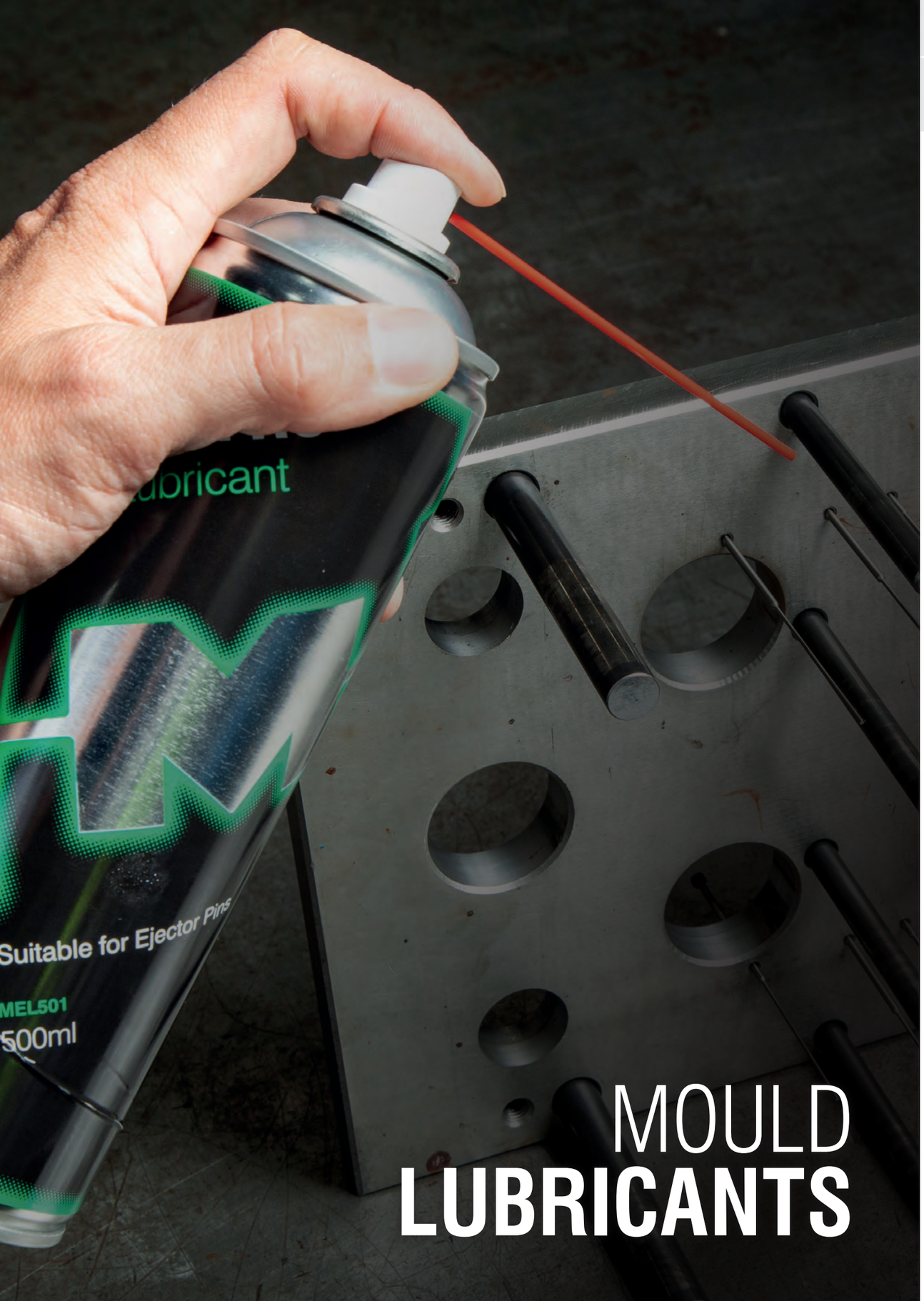

MOULD LUBRICANTS

Mould Cleaning	p. 97	**Mould Lubricant**	**p. 106**
Absorbents	p. 101	Nano Mould Coating	p. 109
Mould Protection	p. 102	Purging Compound	p. 110
Mould Release	p. 104		

Ejector Pin Lubricant

LUBRICATE

Part No.	Description	Size	
MEL501	Ejector Pin Lubricant	500 ml / 18 oz	12

Non-soiling lubricants that keep moving parts running smoothly and prevent damage due to breakage and seizing. For Slides and Ejector Pins.

Features
- Thin-film lubrication, long-term action, good protection from corrosion.
- Application temperature range : -30°C - +150°C.
- Supplied in aerosol or paste form, all aerosols are free of fluorocarbons.

Maintenance Lubricant

LUBRICATE

Part No.	Description	Size	
MWD501	Maintenance Lubricant	500 ml / 18 oz	12

A multi-purpose product for lubricating, cleaning, dewatering, penetrating and corrosion protection. Can be used in endless applications on all metallic surfaces including moulds, chains, gears, tools, etc.

Features
- Long lasting lubrication moisture displacement.
- Forms a temporary anti-corrosion coating.
- Penetrates rust and corrosion.
- Contains PTFE for improved lubrication and load resistance.

Ejector Pin Lubricant

LUBRICATE

	Part No.	Description	Size	
NSF	**MLF501FG**	Ejector Pin Lubricant	500 ml / 18 oz	12

Non-soiling lubricants that keep moving parts running smoothly and prevent damage due to breakage and seizing.

Features
- For Slides and Ejector Pins.
- Thin-film lubrication, long term action, good protection from corrosion.
- Operating Temperature - up to 260°C.

Ejector Pin Lubricant - General Purpose

LUBRICATE

	Part No.	Description	Size	
NSF	**MEP500FG**	White Mould Lubricant	0,5 kg	1

Fully synthetic food grade grease manufactured using the most advanced lubrication technology, and is designed to cover a wide range of Food Industry Applications: Including low/high temperatures, wet and saturated conditions, heavily loaded applications, and where there is the presence of dust & other contaminants.

MEP500FG is formulated with Extreme Pressure (EP) additives and PTFE to provide a high degree of anti-wear and friction reduction performance. Suitable for injection moulds in particular for use on ejector pins, guide pins, slides and moving cores, etc. This grease is suitable for all plain and anti-friction bearings as well as sliding surfaces and general Food & Non-Food Industry applications.

- Temp range -50c to + 180c
- High Load Grease 400kg weld load
- Water & Chemical Resistant
- Extends Lubrication Frequencies
- Standardisation "One Grease for Most Applications

Mould Cleaning p. 97
Absorbents p. 101
Mould Protection p. 102
Mould Release p. 104
Mould Lubricant p. 106
Nano Mould Coating p. 109
Purging Compound p. 110

Ejector Pin Lubricant - High Temperature

LUBRICATE

	Part No.	Description	Size	
NSF	MLF500FG	Ejector Pin Grease	0,5 kg	1
NSF	MLF080FG	Ejector Pin Grease	80 ml.	1

Non-soiling lubricants that keep moving parts running smoothly and prevent damage due to breakage and seizing.
For Slides and Ejector Pins. Thin-film lubrication, long term action, good protection from corrosion.
Operating Temperature - up to 260 C.

Copper Anti-Seize Assembly Compound

LUBRICATE

Part No.	Description	Size	
MCS500	Copper Assembly Compound	0,5 kg	1
MCS080	Copper Assembly Compound	80 ml.	1

Mouldpro Copper Anti-Seize ensures rapid and easy assembly of threaded parts. It allows correct torque to be applied by eliminating thread interference.
Mouldpro Copper Anti-Seize paste prevents seizing and galling and gives quick and easy breakout of threads, gaskets and packings even after long exposure to high temperature, corrosive conditions or extreme surface pressures. It also reduces wear in areas of high friction.
Temperature up to 1.100°C.

Mould Cleaning p. 97
Absorbents p. 101
Mould Protection p. 102
Mould Release p. 104
Mould Lubricant p. 106
Nano Mould Coating p. 109
Purging Compound p. 110

NanoMoldcoating®

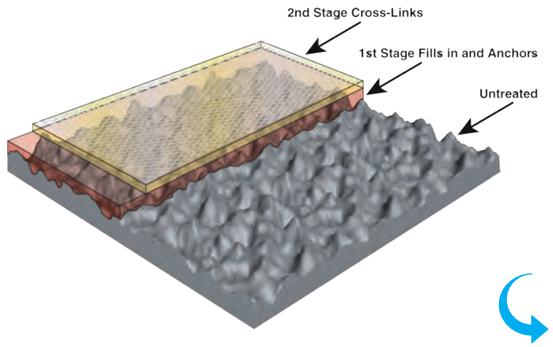

RELEASE

Type	HC-Heat Cure	"HCF-Heat Cure FDA Compliant"	QC-Quick Cure	"QCru-Quick Cure Rubber"	"QCsi-Quick Cure Silicone"
Part No.	HC-5 ml.	HCF-10 ml.	QC	QCRU	QCSI
Excellent Release	•	•	•	•	•
Thermoplastics all grades	•	•	•		
Rubber				•	
Silicone					•
Cure time 10-15 min.			•	•	•
Cure time 3-4 hours.	•	•			
Cured with hot air	•	•			
Cured by heating mould			•	•	•
Application on cold surface	•	•			
Application on heated surface			•	•	•
Bonds on pre-treated surfaces			•	•	•
Multiple coats are possible	•	•	•	•	•
Solvent Carrier	•	•			
Water Carrier			•	•	•
Polymer film	•	•			
Flouropolymer film			•	•	•
Up to 500K Cycles	•	•	•	•	•
May require frequent reapplication			•	•	•
Temperatures up to 250°C	•	•	•	•	•
Temperatures up to 540°C	•	•			
Bottle net volume	5 ml.	10 ml.	60 ml.	60 ml.	60 ml.

Benefits for your Production

- Up to 500,000 cycles per coating
- Reduces cycle times, increases productivity & eliminates sticking
- In-house/Self applied application
- Improves part quality
- Improves part finish by eliminated dragging and stretching
- Reduces moulding pressure and temperature
- Reduction in part weight due to lower packing pressures
- Does not migrate to part surface
- Can be used for virtually any moulded material
- Kits include everything for the application
- Non-toxic

MOULDPRO PURGING COMPOUNDS

Benefit:

Universal Application
Mouldpro offers cleaning compounds for any polymer application. Choose between Ready-to-use or pure Concentrate.

Econonmical and Effecient
All our cleaning compounds offer best cleaning process and lowest cleaning price.

ASK ONE OF OUR PURGING EXPERTS TODAY FOR MORE INFORMATION

Mould Cleaning	p. 97	Mould Lubricant	p. 106
Absorbents	p. 101	Nano Mould Coating	p. 109
Mould Protection	p. 102	**Purging Compound**	**p. 110**
Mould Release	p. 104		

Purging Compound

Part No.	Product	Size	Injection Moulding	Blow Moulding	Pass filter	Hot runner suitable	NSF registered	Polyolefins	PS	SAN, ABS, ASA	PVC	PTFE, PVDF	PMMA	POM	PA6, PA66, PA610, PA11, PA12	PC, PC/ABS	PET, PBT	PPO, PEEK, PPS, PES, PSU, LCP	CA, CAB, CP	TPU,TPE	Temperature range high 300C	Temperature range 120-300C
MC200	MasterClean	20 kg	•	□	•	•	•	•	•	•	○	•	•	•	•	○	•		•	•	□	•
MP1X	MultiPurge	1 kg	•	•	•	•	•	•	•	•	•	•	•	•	•	•	•	•	•	•	•	•
MP5X	MultiPurge	5 kg	•	•	•	•	•	•	•	•	•	•	•	•	•	•	•	•	•	•	•	•
MP10X	MultiPurge	10 kg	•	•	•	•	•	•	•	•	•	•	•	•	•	•	•	•	•	•	•	•
MP20X	MultiPurge	20 kg	•	•	•	•	•	•	•	•	•	•	•	•	•	•	•	•	•	•	•	•

Ready to use Compounds. Safe and fast cleaning of screws, cylinders and nozzles.

• Highly recommended
○ Medium recommended
□ Suitable

MasterClean

Ready-to-use granular purging compound for the cleaning of screws, cylinders, machine nozzles and hot runners.

Features
- Quick Colour Changes
- Quick Material Changes
- Effective removal of Carbon (Black Spots)
- Effective Shut Down Medium for Heat Sensitive Materials

Benefits
- Easy to Use – Follow the simple Instructions.
- Reduced Downtime – Fast and Effective Operation means faster changeovers.
- Non Abrasive – Our purging compound is a high grade polymer with additives containing no abrasives.
- Clean – A high quality product that generates No Smoke, Vapour or Odours during operation.
- Economical – Only a small amount of purging compound is required this combined with Fast and
  Effective Operation means lower downtime and increases productivity.
- NSF registered.

MultiPurge

MultiPurge is a cleaning compound concentrate in pellets, which can be mixed (10%) with any type of virgin thermoplastics, especially engineered to clean barrel, screw, nozzle and hot runners from carbon residuals, deposits, incrustations in changing colour and material.

ONE Purge Agent for ALL Polymers!
By mixing with virgin materials, the original temperature settings can be used to ensure optimized cleaning conditions.

- Temperature range: 80°C up to 420°C.
- MultiPurge is odorless, non-toxic; it doesn't contain solvents and it isn't abrasive.
- All components of MultiPurge are qualified as Generally Recognized as Safe (GRAS) by FDA.
- MultiPurge is environmentally safe.
- MultiPurge is EXTREMELY economical.
- NSF registered.

113 Hot Runner Controllers

117 Heater Bands

122 Thermocouples

125 Connectors

137 Cable Cutter and Stripper

138 Cable Glands

139 Cables

140 Thermometers

142 Thermal Cameras

TEMPERATURE CONTROL PERFECTED

Hot Runner Controllers	**113**	Connectors	125	Cables	139
Heater Bands	117	Cable Cutter and Stripper	137	Thermometers	140
Thermocouples	122	Cable Glands	138	Thermal Cameras	142

Compact and smart controller for 6 or 12 zones

- Precise control the temperature in the hot runner system, improve production efficiency, reduce production costs, and ensure stability and quality during the injection moulding process.
- 7" LCD display with touch panel which can display real-time temperature and other control parameters, such as: mould leakage detecting, synchronous heat up and cool down, mold memory, group setup function, power balance detection and display, self diagnosis log.
- It also supports injection machine connect for I/O function and optional VNC function, achieving intelligent one-stop production control.

1. Thermocouple type: J/K
2. Temperature unit: °C/°F
3. Heating mode selectable
4. The maximum drive current is 15 ampere for each zone
5. Temperature PID control
6. Zero cross/Phase angle output trigger modes
7. Auto detect the frequency of power source
8. The current detect and display
9. The output with auto/manual setting
10. The soft-start for dehumidification
11. Boost
12. Standby
13. Output mode: Stop/Manual/Slave/continually selectable when Thermo-coupler broken
14. Overload protection for electric Overload protect for heating output
15. The protect mode of power source when wrong input
16. Auto shutdown when abnormal work on module
17. The fast fuse used to protect TRIAC

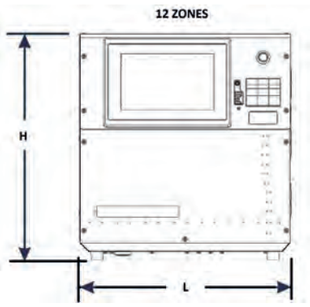

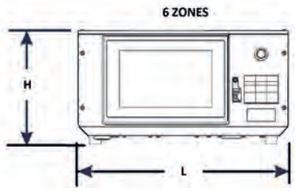

Part No.	Zones	H	L	Power supply	Cable	Cable-Connector Type
HRC600	6	18,3	33,7	400 VAC/3Phase/N/E	3 M	24 x 1 - CHI24/CNEF24
HRC1200	12	36,3	33,7	400 VAC/3Phase/N/E	3 M	24 x 2 - CHI24/CNEF24

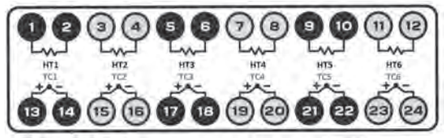

Wiring Connector Assignment example (24 x 1)

HT = Heater
TC = Thermocouple

Hot Runner Controllers	**113**	Connectors	125	Cables	139
Heater Bands	117	Cable Cutter and Stripper	137	Thermometers	140
Thermocouples	122	Cable Glands	138	Thermal Cameras	142

Hot Runner Controller - LCD

Mouldpro LCD hot runner control module is using a wide viewing angle LCD screen. It can display more information at the same time than the LED screen, such as soft start status, alarm information, etc. It supports RS485 communication, alarm output function and remote standby function. With these special functions, this excellent controller can help you improve production automation and efficiency.

Power Input	AC85~265V, 50/60 Hz
Power Output	3-phase 240Vac, 15A, 3600W
Power Consumption	5W
Sensor Type	J or K
Temperature Unit	°C or °F
Control Mode	Auto, Manual
Output Mode	Phase Angle, Zero Cross
Measurement Range	0~500°C(32~932°F)
Measurement Accuracy	± 0.25% Full scale
Setting Range	0~450°C(32~842°F)
Control Accuracy	± 0.5°C
Working environment	-0~55°C, 10~80% RH(No condensing)
Communications	RS-485 (Modbus TCP)

Hot Runner Controller - LCD

Part No.	Number of Zones	Cabinet Dimensions A	B	C	Cable/Connector Type
HRC002H	2	220	185	280	1 x 10 pin - CHI10/CNEF10
HRC004H	4	220	310	280	1 x 16 pin - CHI16/CNEF16
HRC006H	6	220	410	280	1 x 24 pin - CHI24/CNEF24
HRC008H	8	220	510	280	2 x 16 pin - CHI16/CNEF16
HRC012H	12	220	710	280	2 x 24 pin - CHI24/CNEF24

- High/Low temperature alarm
- Thermocouple open, reverse, short alarm
- Heater open, short, overload alarm
- Heating invalid alarm
- Over-voltage protection
- Overload protection, cut off output
- *Short circuit protection, cut off output
- Triac damage protection, cut off output
- Supplied with 3m. Power and T/C Cable combined

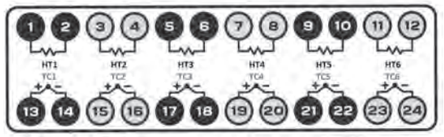

Wiring Connector Assignment example (24 x 1)

HT = Heater
TC = Thermocouple

Spare Module

Part No.	Number Zones	A	B
HRM16H	Single Zone Module	176	50
HRM16B	Blanking Plate	176	50

Hot Runner Controllers	**113**	Connectors	125	Cables	139
Heater Bands	117	Cable Cutter and Stripper	137	Thermometers	140
Thermocouples	122	Cable Glands	138	Thermal Cameras	142

Single/Dual Zone Controllers Stand Alone

The integrated single and dual zone hot runner temperature controller is suitable for small moulds. The portable controller is of small size, light weight, complete functions and easy to operate. It is really a very smart and economic choice for your hot runner controller system.

Power Supply	1-phase, 85-265Va, 50-60Hz
Temperature unit	°C or °F
Thermocouple	J or K
Output	240Vac, 15Amps per zone
Control Mode	Auto, Manual, Standby
Power Control	Phase Angle, Zero Crossing
Measurement Range	0~500°C(32~932°F)
Calibration Accuracy	± 0.25% Full scale
Setting Range	0~450°C(32~842°F)
Control Accuracy	± 0.5°C
Working environment	-0~55°C, 10~80% RH(No condensing)
Working environment	-0~55°C, 10~80% RH(No condensing)
Communications	RS-485 (Modbus TCP)

Single/Dual Zone Controllers Stand Alone

Part No.	Number of Zones	Cable/Connector Type
HRC100	1	1 x 5 pin - CKAX03I/CKF04
HRC200	2	2 x 5 pin - CKAX03I/CKF04

- Compact stand alone cabinet design
- Small and light, easy to operate
- LED display
- PID control
- Auto/Manual
- Dehumidify soft start, protect machine
- Internal alarm buzzer
- Smart & economical for hot runner system

Hot Runner Controllers	113	Connectors	125	Cables	139
Heater Bands	**117**	Cable Cutter and Stripper	137	Thermometers	140
Thermocouples	122	Cable Glands	138	Thermal Cameras	142

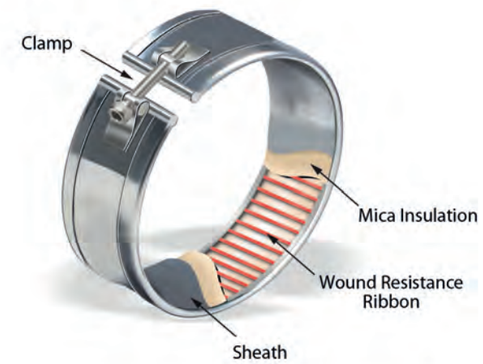

Nozzle Heater Selection Guide

Mouldpro offers a wide range of nozzle band heaters, for reliable and powerful heating of the nozzles on injection moulding machines.

All heater types are CE marked and made of premium quality materials.

	MBI Type	NHB Type	Z17 Type
Application			
Wattage Load	4,5W/cm2	6 W/cm²	8 W/cm²
Working Temperatures	350 C	370°C	400°C
Standard Voltage	230 V.	230 V.	230 V.
Cable Type	SS-Bipolar + Earth	SS-Bipolar	SS-Bipolar+ Earth
Cable Length	1000 mm.	1000 mm.	1000 mm.
Cable Exit	45°	Super Flex	45°
Insulation	Mica	Mica	Mica
Sealed construction	Yes	No	Yes
Lifetime	✓✓	✓	✓✓✓

The NHB Type is normally used when space around the nozzle is limted (near gate or hotrunners) and the flexible cables allows compact installation.The electric connection between the heater and the feeding cables is integrated into the internal heating element.

The high quality Stainless Steel sealed heater is the perfect solution, when high performance and power is required. The Z17 heaters are made of Stainless Steel Tube which ensures a solid construction and is resistant to corrosive action and and hermetically sealed to avoid any plastic seepage.

Hot Runner Controllers	113	Connectors	125	Cable Cutter and Stripper	139
Heater Bands	**117**	Cable Glands	136	Thermometers	140
Thermocouples	122	Cables	137	Thermal Cameras	142

Mica Brass Nozzle Heaters

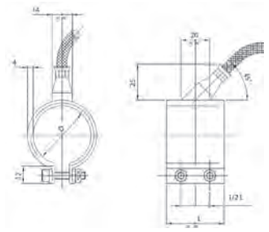

Part No.	Ø (mm)	L (mm)	Watt
MBI252010	25	20	80
MBI252510	25	25	85
MBI253010	25	30	100
MBI253510	25	35	125
MBI302010	30	20	100
MBI302510	30	25	105
MBI303010	30	30	125
MBI303510	30	35	145
MBI304010	30	40	165
MBI305010	30	50	235
MBI352010	35	20	110
MBI352510	35	25	120
MBI353010	35	30	145
MBI353510	35	35	170
MBI354010	35	40	195
MBI354510	35	45	220
MBI356010	35	60	325
MBI382510	38	25	140
MBI383010	38	30	165
MBI383810	38	38	215
MBI384010	38	40	175
MBI384510	38	45	250
MBI385010	38	50	300
MBI402510	40	25	140
MBI403010	40	30	165
MBI403510	40	35	195
MBI403810	40	38	270
MBI404010	40	40	225
MBI404510	40	45	250
MBI405010	40	50	275
MBI406010	40	60	305
MBI422510	42	25	145
MBI423010	42	30	175
MBI424010	42	40	235
MBI452010	45	20	125
MBI452510	45	25	155
MBI453010	45	30	190
MBI453510	45	35	220
MBI454010	45	40	250
MBI454510	45	45	285

Part No.	Ø (mm)	L (mm)	Watt
MBI455010	45	50	315
MBI455510	45	55	345
MBI482010	48	20	135
MBI485010	48	50	380
MBI502010	50	20	140
MBI502510	50	25	175
MBI503010	50	30	210
MBI503510	50	35	245
MBI504010	50	40	280
MBI505010	50	50	350
MBI506010	50	60	420
MBI552010	55	20	155
MBI552510	55	25	190
MBI553010	55	30	230
MBI553510	55	35	270
MBI554010	55	40	310
MBI555010	55	50	385
MBI602010	60	20	165
MBI602510*	60	25	210
MBI603010	60	30	250
MBI603510	60	35	295
MBI604010	60	40	335
MBI605010	60	50	420
MBI606010	60	60	450
MBI652010	65	20	180
MBI654010	65	40	365
MBI703510	70	35	345
MBI704010	70	40	395
MBI705010	70	50	490
MBI706010	70	60	590
MBI755010	75	50	525
MBI756010	75	60	635
MBI802510	80	25	280
MBI804010	80	40	450
MBI806010	80	60	675
MBI902510	90	25	315
MBI903010	90	30	380
MBI904010	90	40	505
MBI905010	90	50	635

Sealed design, with stainless steel cable, prevents material infiltration and extends the lifetime.

Features:
- Economical sealed shielded mica nozzle heaters.
- Axial cover 45° opposite to tightening
- 1 m. SS braided cable
- Voltage 230V

Application:
- Injection moulding nozzles

Temperature Control | Heater Bands

Hot Runner Controllers	113	Connectors	125	Cables	139
Heater Bands	**117**	Cable Cutter and Stripper	137	Thermometers	140
Thermocouples	122	Cable Glands	138	Thermal Cameras	142

Mica Nozzle Heaters

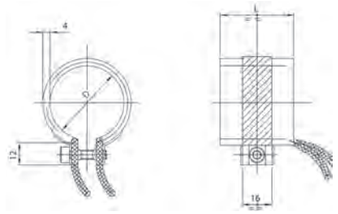

Part No.	Ø (mm)	L (mm)	Watt
NHB25x25	25	25	120
NHB25x30	25	30	120
NHB25x32	25	32	120
NHB25x35	25	35	130
NHB25x38	25	38	140
NHB25x40	25	40	150
NHB25x45	25	45	165
NHB25x50	25	50	180
NHB30x25	30	25	120
NHB30x30	30	30	130
NHB30x32	30	32	140
NHB30x35	30	35	150
NHB30x38	30	38	160
NHB30x40	30	40	175
NHB30x45	30	45	200
NHB30x50	30	50	220
NHB32x25	32	25	115
NHB32x30	32	30	140
NHB32x32	32	32	150
NHB32x35	32	35	160
NHB32x38	32	38	175
NHB32x40	32	40	180
NHB32x45	32	45	200
NHB32x50	32	50	230
NHB35x25	35	25	130
NHB35x30	35	30	150
NHB35x32	35	32	160
NHB35x35	35	35	175
NHB35x38	35	38	190
NHB35x40	35	40	200
NHB35x45	35	45	225
NHB35x50	35	50	250

Part No.	Ø (mm)	L (mm)	Watt
NHB38x25	38	25	140
NHB38x30	38	30	160
NHB38x32	38	32	170
NHB38x35	38	35	190
NHB38x38	38	38	200
NHB38x40	38	40	225
NHB38x45	38	45	270
NHB38x50	38	50	275
NHB40x25	40	25	140
NHB40x30	40	30	175
NHB40x32	40	32	180
NHB40x35	40	35	200
NHB40x38	40	38	220
NHB40x40	40	40	230
NHB40x45	40	45	250
NHB40x50	40	50	280
NHB45x25	45	25	160
NHB45x30	45	30	185
NHB45x32	45	32	200
NHB45x35	45	35	225
NHB45x38	45	38	200
NHB45x40	45	40	250
NHB45x45	45	45	275
NHB45x50	45	50	325
NHB50x25	50	25	180
NHB50x30	50	30	220
NHB50x32	50	32	235
NHB50x35	50	35	250
NHB50x38	50	38	280
NHB50x40	50	40	300
NHB50x45	50	45	325
NHB50x50	50	50	375

Mica insulated heater, Supplied with 1000 mm Lead 230 V.
Working Temperature max 350/370°C.

Hot Runner Controllers	113	Connectors	125	Cables	139
Heater Bands	**117**	Cable Cutter and Stripper	137	Thermometers	140
Thermocouples	122	Cable Glands	138	Thermal Cameras	142

Stainless Steel Nozzle Heaters

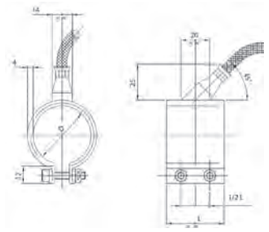

STAINLESS STEEL

Part No.	Ø (mm)	L (mm)	Watt
Z17025030	25	30	130
Z17030020	30	20	100
Z17030025	30	25	130
Z17030030	30	30	170
Z17030035	30	35	200
Z17030040	30	40	230
Z17035025	35	25	160
Z17035030	35	30	200
Z17035035	35	35	240
Z17035040	35	40	270
Z17035045	35	45	310
Z17040020	40	20	160
Z17040025	40	25	190
Z17040030	40	30	230
Z17040035	40	35	270
Z17040040	40	40	310
Z17040045	40	45	350
Z17045025	45	25	210
Z17045030	45	30	260
Z17045035	45	35	310
Z17045040	45	40	350
Z17045045	45	45	400
Z17045050	45	50	450
Z17050020	50	20	190
Z17050025	50	25	240
Z17050030	50	30	290
Z17050035	50	35	340
Z17050040	50	40	390
Z17050050	50	50	500
Z17050060	50	60	600
Z17055020	55	20	210
Z17055025	55	25	270
Z17055030	55	30	320
Z17055035	55	35	380
Z17055040	55	40	430
Z17055050	55	50	540
Z17060020	60	20	230
Z17060025	60	25	290
Z17060030	60	30	350
Z17060035	60	35	410
Z17060040	60	40	470
Z17060050	60	50	600
Z17060060	60	60	720
Z17065020	65	20	250
Z17065025	65	25	320
Z17065030	65	30	380
Z17065035	65	35	450
Z17065040	65	40	520
Z17065050	65	50	650

Part No.	Ø (mm)	L (mm)	Watt
Z17070020	70	20	270
Z17070025	70	25	340
Z17070030	70	30	410
Z17070035	70	35	490
Z17070040	70	40	560
Z17070050	70	50	700
Z17070060	70	60	840
Z17075020	75	20	290
Z17075025	75	25	370
Z17075030	75	30	440
Z17075035	75	35	520
Z17075040	75	40	560
Z17075050	75	50	750
Z17075060	75	60	900
Z17080020	80	20	310
Z17080025	80	25	390
Z17080030	80	30	470
Z17080035	80	35	560
Z17080040	80	40	640
Z17080050	80	50	800
Z17080060	80	60	960
Z17085020	85	20	330
Z17085025	85	25	420
Z17085030	85	30	500
Z17085035	85	35	590
Z17085040	85	40	680
Z17085050	85	50	850
Z17085060	85	60	1020
Z17090020	90	20	350
Z17090025	90	25	440
Z17090030	90	30	540
Z17090035	90	35	630
Z17090040	90	40	720
Z17090050	90	50	900
Z17090060	90	60	1080
Z17095020	95	20	370
Z17095025	95	25	470
Z17095030	95	30	570
Z17095035	95	35	660
Z17095040	95	40	760
Z17095050	95	50	950
Z17095060	95	60	1150
Z17100020	100	20	380
Z17100025	100	25	500
Z17100030	100	30	600
Z17100035	100	35	700
Z17100040	100	40	800
Z17100050	100	50	1000
Z17100060	100	60	1200

Sealed nozzle heater high Wattage.
Supplied with 1000 mm Lead.
230 V. Working Temperature max 380/400°C.

Temperature Control | Heater Bands

Hot Runner Controllers	113	Connectors	125	Cables	139
Heater Bands	**117**	Cable Cutter and Stripper	137	Thermometers	140
Thermocouples	122	Cable Glands	138	Thermal Cameras	142

Wedge Lock Heater

Part No.	Ø (mm)	L (mm)	Power (W)
WL1010	25	25	100
WL1015	25	38	150
WL1020	25	50	500
WL1025	25	63	250
WL1030	25	75	400
WL1040	25	100	300
WL1210	32	25	125
WL1215	32	38	200
WL1220	32	50	250
WL1230	32	75	400
WL1315	35	38	200
WL1320	35	50	300
WL1510	38	25	150
WL1515	38	38	250
WL1520	38	50	300
WL1525	38	63	350
WL1530	38	75	450
WL1540	38	100	600

Part No.	Ø (mm)	L (mm)	Power (W)
WL1550	38	125	750
WL1707	45	19	125
WL1710	45	25	175
WL1715	45	38	250
WL1720	45	50	350
WL1730	45	75	500
WL1740	45	100	700
WL1760	45	150	1000
WL2010	50	25	200
WL2015	50	38	300
WL2020	50	50	400
WL2030	50	75	600
WL2040	50	100	800
WL2515	64	38	375
WL2520	64	50	500
WL2530	64	75	750
WL3015	75	38	450
WL3020	75	50	600

Description
Friction Fit Bands

Applications
Use where recessed sprue bushings and similar obstructions create limited space for nozzle heater band. These bands require only 9mm to 12.5 mm diameter clearance (4.8 mm to 6.4 mm per side).

Example
Using a nozzle with 1 1/2" (38.1 mm) body diameter plus the FRICTION FIT band, the clearance required is only 2" (50.8 mm) or less. This band is also finding increased usage in place of regular nozzle bands due to ease of installation and removal.

To Install
Simply slide the band over the nozzle, then tap the tapered key. The band will automatically tighten to a nice snug fit.

To Remove
Just tap the tapered key in the opposite direction, then pull off the band.
Complete with Fibreglass leads

Hot Runner Controllers	113	Connectors	125	Cables	139
Heater Bands	117	Cable Cutter and Stripper	137	Thermometers	140
Thermocouples	**122**	Cable Glands	138	Thermal Cameras	142

Thermocouple - Bayonet

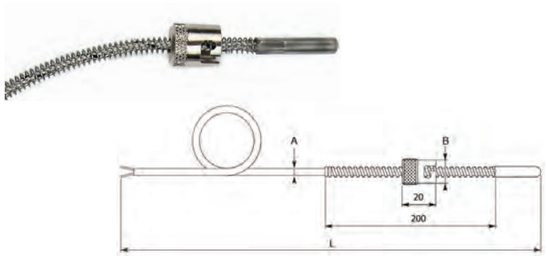

Part No.	Isolated	A (mm)	B (mm)	L (mm)
B511	No	5	10	1 500
B512	No	5	10	2 000
B612	No	6	12	2 000
B614	No	6	12	4 000
C612	No	6	14	2 000
C614	No	6	14	4 000
D612	Yes	6	12	2 000
D614	Yes	6	12	4 000
B812	No	8	12	2 000
B814	No	8	12	4 000
C812	No	8	14	2 000

Tip: Stainless Steel 316L.
Hot junction type: Isolated or grounded.
Probe: Type J thermocouple, DIN IEC 584 Class 1.
Connection: Bayonet (2 lugs) in nickel-plated brass, inner diameter: 10 mm, 12 mm, 14 mm, 15 mm, or 16 mm.
Connection cable: Fiberglass / Stainless steel braid, 2 x 0.22 mm².
Maximum operating temperature: 400°C.

Thermocouple - Nozzle Type

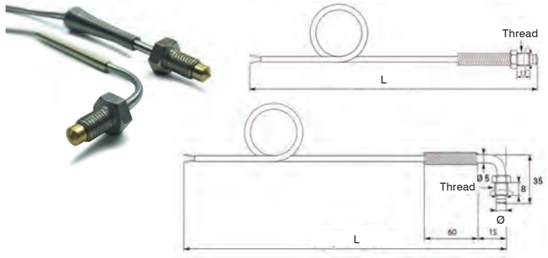

Part No. (Straight)	Part No. (90°)	Thread	L (mm)
NA36	**NA36/90**	1/4'' - 28 NFT	900
NA60	**NA60/90**	1/4'' - 28 NFT	1500
NA84	**NA84/90**	1/4'' - 28 NFT	2000
NA36P6	**NA36/90P6**	6 mm	900
NA60P6	**NA60/90P6**	6 mm	1500
NA84P6	**NA84/90P6**	6 mm	2000
NA36P8	**NA36/90P8**	8/1,25 mm	900
NA60P8	**NA60/90P8**	8/1,25 mm	1500
NA84P8	**NA84/90P8**	8/1,25 mm	2000

All Mouldpro nozzles come with a threaded flat surface to accommodate these cost-effective thermocouples with a 1/4"-28 NFT thread.

Probe:
Type: J and K
Temperature range:
Type J: up to 750°C.
Thread sizes:
1/4''-28 NFT, 6 mm, 8/1.25 mm, or 10/1 mm.
Cable lengths:
Other lengths available on request.
Cable:
Single wire output with braided shield.

Thermocouple - Pin Type

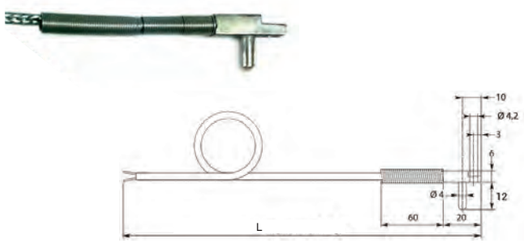

Part No.	L (mm)
BTTC1	1000

Tip: 316L Stainless Steel.
Hot Junction Type: Insulated or grounded.
Probe: Type J thermocouple, DIN IEC 584, Class 1.
Mounting: Fixed with a 4 mm screw.
Connection: Stainless steel tab, 20 mm x 6 mm x 6 mm.
Connection Cable: Glass fiber/glass fiber/stainless steel braid, 2 x 0.22 mm².
Maximum Operating Temperature: +400°C.

Thermocouple - Bendable Probe

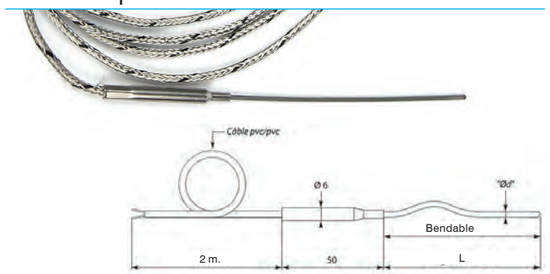

Part No.	Ø (mm)	L (mm)	Cable (mm)
TI04J11002000	1,0	100	2000
TI04J11502000	1,0	150	2000
TI04J151502000	1,5	150	2000
TI04J152502000	1,5	250	2000
TI04J154002000	1,5	300	2000

Execution compliant with AMS 2750 Revision D standard.
Protective Sheath: 316L Stainless Steel (Type J)
Operating Temperature: Type J: -40 to +750°C
316L Stainless Steel Junction:
• Ø 6 mm for thermocouples with diameters 0.5 to 4.5 mm.
Insulated Type J Thermocouple, Flexible Stainless Steel Sheath.
Glass Fiber Cable with Metal Braid, 2 m Length.

Temperature Control | Thermocouples

Hot Runner Controllers	113	Connectors	125	Cables	139
Heater Bands	117	Cable Cutter and Stripper	137	Thermometers	140
Thermocouples	**122**	Cable Glands	138	Thermal Cameras	142

Thermocouple Leaf Type

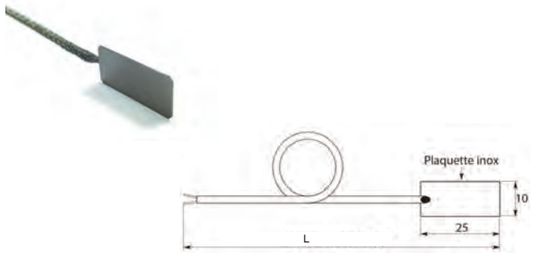

Part No.	L (mm)
LA36	1000
LA60	1500
LA72	2000

Leaf-Type Nozzle Thermocouples are designed with a thin tip for use in tight spaces. They can be slid under nozzle bands or placed on surfaces where drilling a hole is difficult or even impossible.

Thermocouple - Leaf Type, 45°

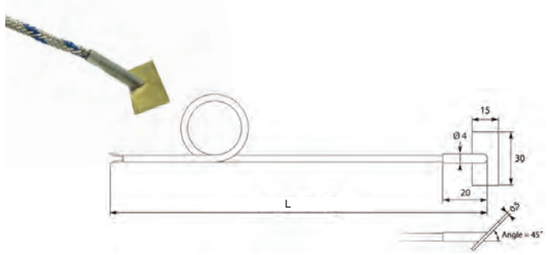

Part No.	Isolated	Type	L (mm)
TP312000	No	J	2000
TP312000I	Yes	J	2000

Glass fiber insulated connection cable.
45° axial output.
Glass fibre
Braided sheath

Thermocouple - Spade Type

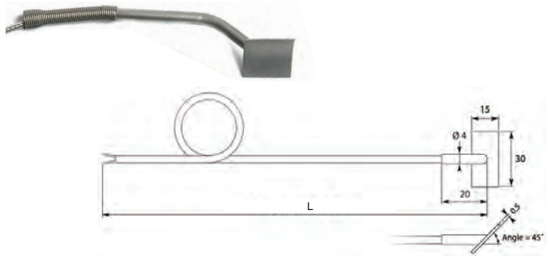

Part No.	L (mm)
STA36	900
STA60	1500
STA84	2100

Temperature range
Type J up to 750°C / Type K up to 1,100°C

Standard delivery
Single wire output with braided shielding.
Spade-type thermocouples are designed with a thin tip for use in confined spaces. They can be slid under nozzle clamps or placed on surfaces where drilling a hole is difficult or impossible.

Thermocouple - Ring Type

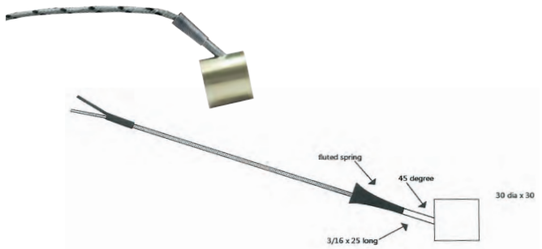

Part No.	Ø (mm)	Height (mm)	L (mm)
CT33	30	30	4000
CT43	40	30	3000
CT44	40	40	3000

Designed to be positioned on the nozzle or small sleeves.
The highly conductive brass, combined with excellent inner rolling, ensures a high-quality temperature reading. It is placed under the heating clamp. We recommend using a clamp with a diameter 1 to 2 mm larger than usual when using this type of thermocouple.
45° output.
Stainless Steel Braiding

Thermocouple - Washer Type

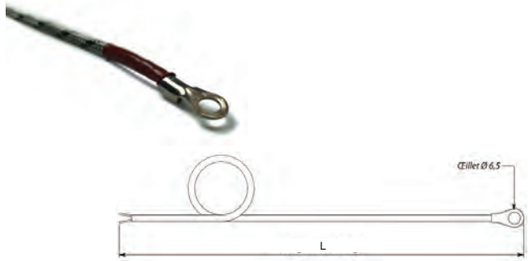

Part No.	L (mm)
SA36	1000
SA60	1500
SA84	2000

Temperature range
Type J: up to 750°C.

Standard delivery
Single wire output with braided shield.
Flat surface sensors can be used alone to measure the temperature on the surface of a nozzle, an injection or extrusion cylinder, or any other type of component.
When used in parallel with another sensor of the same type placed at a different location on the same equipment, it allows you to obtain an average temperature between two points.

Thermocouple - Clamp Type

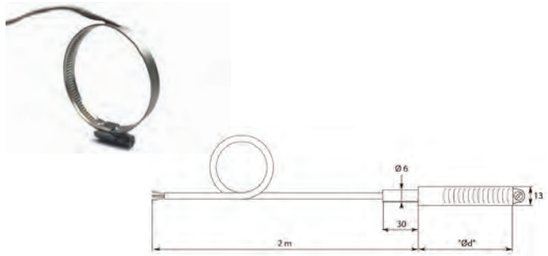

Part No.	Ød (mm)
HCTC1	19-45
HCTC2	40-60
HCTC3	60-80
HCTC4	80-100

Material: All-stainless steel clamp.
Protective sheath: 1 meter.
Type: J.
An excellent, cost-effective thermocouple for temperature measurement on cylindrical parts. Available in various clamping diameters, making it suitable for a wide range of nozzles, tips, and other components. No need for drilling or threading—simply slide the sensor onto the nozzle and tighten the screw.
The strong clamping mechanism ensures optimal heat transfer for accurate readings.

Adaptors

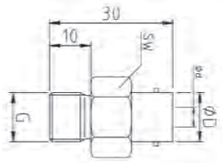

Part No.	øD	ød	SW	G
MTA12M10X1	12	7,1	17	M10x1
MTA12M12X1	12	8,2	16	M12x1
MTA12M12X1,75	12	8,2	16	M12x1,75
MTA12M14x1,5	12	8,2	16	M14x1,5
MTA12G3/8	12	8,2	17	G3/8
MTA14M10X1	14	7,1	17	M10x1
MTA14M12X1	14	8,2	17	M12x1
MTA14M12X1,75	14	8,2	17	M12x1,75
MTA14M14X1,5	14	8,2	17	M14x1,5
MTA14G1/4	14	8,2	17	G1/4
MTA14G3/8	14	8,2	17	G3/8

Extended Adaptors

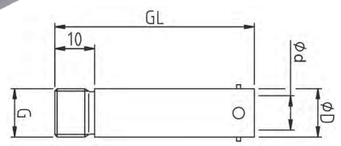

Part No.	øD	ød	G	GL (mm)
MTG10M10X1	10	7,1	M10x1	30
MTG10M10X1,5	10	7,1	M10x1,5	30
MTG10G1/8	11	6,3	G1/8	30
MTG12M10X1	12	7,1	M10x1	50
MTG12M10X1,5	12	7,1	M10x1,5	50
MTG12M12X1	12	8,2	M12x1	50
MTG12M12X1,75	12	8,2	M12x1,75	50
MTG12M14X1,5	12	8,2	M14x1,5	50
MTG14M12X1	14	9	M12X1	50
MTG14M14x1,5	14	9	M14x1,5	50

Multipole Connectors

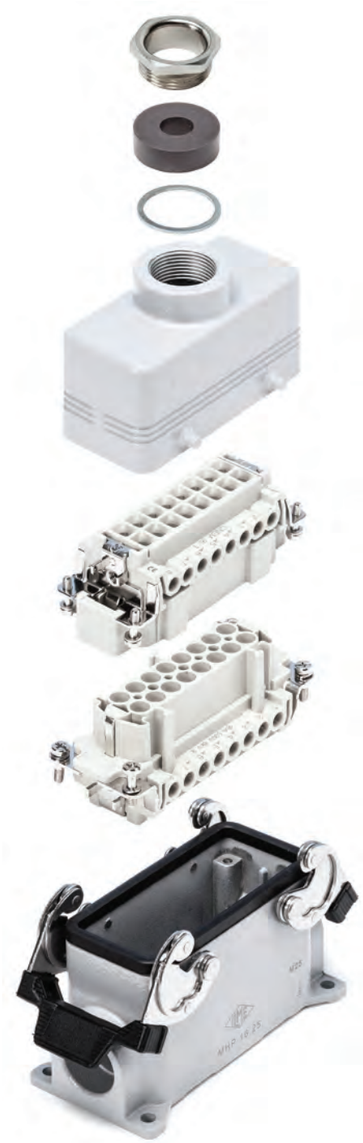

126 Square Connectors

127 Narrow Connectors

130 Standard Connectors

134 High Density Connectors

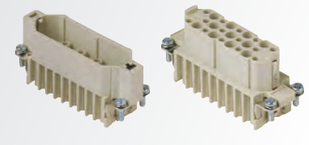

136 Mini Connectors

High quality connectors, compatible with Industry Standard (equivalent products from other manufacturers)

- CE marked
- UL/CSA approved
- Quality Screw terminals
- Cost efficient
- Full range
- Protection standard: IP20
- Seals: NBR
- Temperature range: 125°C (CK type only 100°C)

Hot Runner Controllers	113	**Connectors**	**125**	Cables	139
Heater Bands	117	Cable Cutter and Stripper	137	Thermometers	140
Thermocouples	122	Cable Glands	138	Thermal Cameras	142

Inserts Male

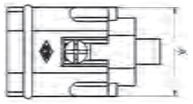
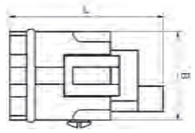

Part No.	# Poles	A	B	L	Size
CKM03	3+E	21	21	30,5	21.21
CKM04	4+E	21	21	36,5	21.21

Inserts Female

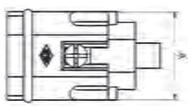
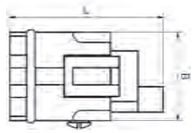

Part No.	# Poles	A	B	L	Size
CKF03	3+E	21	21	30,5	21.21
CKF04	4+E	21	21	36,5	21.21

Straight Hood

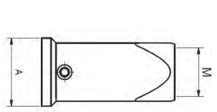
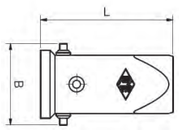

Part No.	# Poles	Levers	A	B	L	M	Size
MKAV20	3/4+E	Single	28	33,5	60,5	M20	21.21

Panel Mount Base

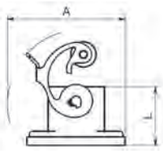

Part No.	# Poles	Levers	A	B	L	Size
CKAX03I	3/4+E	Single	57,5	32	24	21.21

Straight Hood, Single Lever

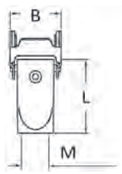

Part No.	# Poles	Levers	A	B	L	Size
MKAXVG20	3/4+E	Single	24	33	51,5	21.21

Hot Runner Controllers	113	**Connectors**	**125**	Cables	139
Heater Bands	117	Cable Cutter and Stripper	137	Thermometers	140
Thermocouples	122	Cable Glands	138	Thermal Cameras	142

Inserts Male, Screw Terminals

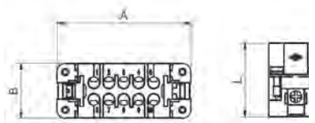

Part No.	# Poles	A	B	L	Size
CDAM10	10 Pole	56,5	23	31	49.16
CDAM16	16 Pole	73	23	31	66.16

Inserts Female, Screw Terminals

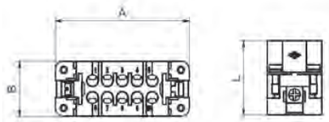

Part No.	# Poles	A	B	L	Size
CDAF10	10 Pole	56,5	23	31	49.16
CDAF16	16 Pole	73	23	31	66.16

Inserts Male, Screw Terminals

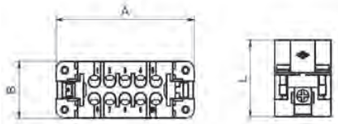

Part No.	# Poles	Pin #	A	B	L	Size
CDAM16	16 Pole	1-16	73	23	31	66.40
CDAM16N	16 Pole	17-32	73	23	31	66.40

Inserts Female, Screw Terminals

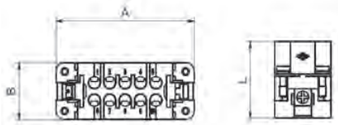

Part No.	# Poles	Pin #	A	B	L	Size
CDAF16	16 Pole	1-16	73	23	31	66.40
CDAF16N	16 Pole	17-32	73	23	31	66.40

Hot Runner Controllers	113	**Connectors**	**125**	Cables	139
Heater Bands	117	Cable Cutter and Stripper	137	Thermometers	140
Thermocouples	122	Cable Glands	138	Thermal Cameras	142

Top Entry Hood, Single Lever

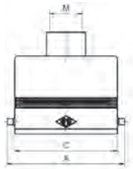

Part No.	# Poles	Levers	A	B	C	L	L1	M	Size
MZAV15L20	10 Pole	Single	72	36	63	64,5	14,5	M20	49.16
MZAV25L20	16/25 Pole	Single	88,5	36	79,5	70,5	14,5	M20	66.16
MZAV25L25	16/25 Pole	Single	88,5	36	79,5	70,5	14,5	M25	66.16

Side Entry Hood, Single Lever

Part No.	# Poles	Levers	A	B	C	L	M	Size
MZO15L20	10 Pole	Single	72	29,4	63	55,9	M20	49.16
MZO25L25	16 Pole	Single	88,5	29,4	79,5	55,9	M25	66.16

Panel Mount Housing, Single Lever

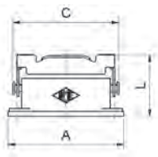
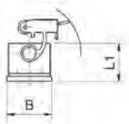

Part No.	# Poles	Levers	A	B	C	L	Size
CZI15L	10 Pole	Single	83	32	76	44	49.16
CZI25L	16/25 Pole	Single	98	32	93	44	66.16

Surface Mount Housing, Single Lever

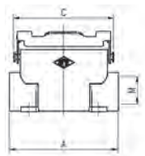
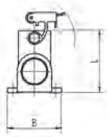

Part No.	# Poles	Levers	A	B	C	L	M	Size
MZP15L25	10 Pole	Single	85	50	76	52	M25	49.16
MZAP25L25	16/25 Pole	Single	101	50	93	57	M25	66.16

Hot Runner Controllers	113	**Connectors**	**125**	Cables	139
Heater Bands	117	Cable Cutter and Stripper	137	Thermometers	140
Thermocouples	122	Cable Glands	138	Thermal Cameras	142

Top Entry Hood, Double Lever

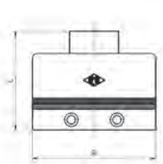

Part No.	# Poles	Levers	A	B	L	L1	M	Size
MAV50.32	32 Pole	Double	82	56	90,5	75	M32	66.40

Side Entry Hood, Double Lever

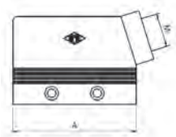

Part No.	# Poles	Levers	A	B	L	M	Size
MAO50.32	32 Pole	Double	82	56	75	M32	66.40

Surface Mount Base, Double Lever

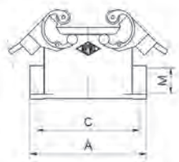
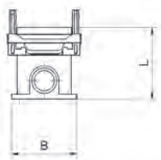

Part No.	# Poles	Levers	A	B	C	L	M	Size
MHP50.32	32 Pole	Double	106	57,3	94	82	M32	66.40

Panel Mount Base, Double Lever

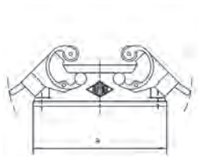
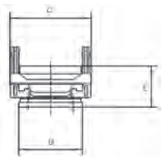

Part No.	# Poles	Levers	A	B	C	L	Size
CHI50	32 Pole	Double	104	58,5	71	29	66.40

Hot Runner Controllers	113	**Connectors**	**125**	Cables	139
Heater Bands	117	Cable Cutter and Stripper	137	Thermometers	140
Thermocouples	122	Cable Glands	138	Thermal Cameras	142

Inserts Male

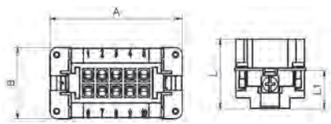

Part No.	# Poles	A	B	L	L1	Size
CNEM06T	6 Pole	50	34	33	18	44.27
CNEM10T	10 Pole	63,4	34	33	18	57.27
CNEM16T	16 Pole	83,5	34	33	18	77.27
CNEM24T	24 Pole	110,3	34	33	18	104.27

Inserts Female

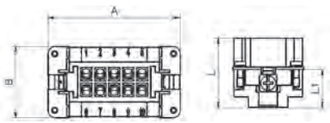

Part No.	# Poles	A	B	L	L1	Size
CNEF06T	6 Pole	50	34	33	18	44.27
CNEF10T	10 Pole	63,4	34	33	18	57.27
CNEF16T	16 Pole	83,5	34	33	18	77.27
CNEF24T	24 Pole	110,3	34	33	18	104.27

Inserts Male

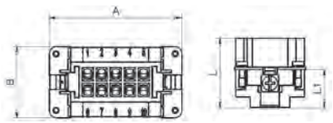

Part No.	# Poles	Pin #	A	B	L	L1	Size
CNEM16T	16 Pole	1-16	83,5	34	33	18	77.62
CNEM16TN	16 Pole	17-32	83,5	34	33	18	
CNEM24T	24 Pole	1-16	110,3	34	33	18	104.62
CNEM24TN	24 Pole	17-32	110,3	34	33	18	

Inserts Female

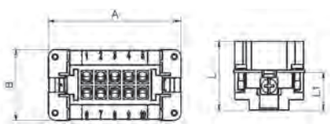

Part No.	# Poles	Pin #	A	B	L	L1	Size
CNEF16T	16 Pole	1-16	83,5	34	33	18	77.62
CNEF16TN	16 Pole	17-32	83,5	34	33	18	
CNEF24T	24 Pole	1-24	110,3	34	33	18	104.62
CNEF24TN	24 Pole	25-48	110,3	34	33	18	

Temperature Control | Connectors *Standard Connectors*

Hot Runner Controllers	113	**Connectors**	**125**	Cables	139
Heater Bands	117	Cable Cutter and Stripper	137	Thermometers	140
Thermocouples	122	Cable Glands	138	Thermal Cameras	142

Top Entry Hood, Single Lever

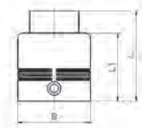

Part No.	# Poles	Levers	A	B	C	L	L1	M	Size
MHV06L20	6 Pole	Single	72	43	60	53	40	M20	44.27
MHV10L20	10 Pole	Single	87	43	73	58	45	M20	57.27
MHV16L25	16 Pole	Single	108	43	93,5	58	45	M25	77.27
MHV24L32	24 Pole	Single	135	43	120	68	55	M32	104.27
MHV48L32	48 Pole	Single	150,5	90	121	121	98	M40	104.62

Side Entry Hood, Single Lever

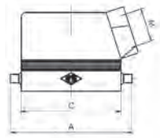
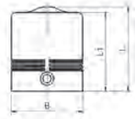

Part No.	# Poles	Levers	A	B	C	L	L1	M	Size
MHO06L20	6 Pole	Single	73	43	60	50,4	47	M20	44.27
MHO10L20	10 Pole	Single	87	43	73	52	49	M20	57.27
MHO16L25	16 Pole	Single	108	43	93,5	63	60	M25	77.27
MHO24L32	24 Pole	Single	135	43	120	63	60	M32	104.27
MHO48L32	48 Pole	Single	150,5	90	121	98	118	M40	104.62

Panel Mount Base, Single Lever

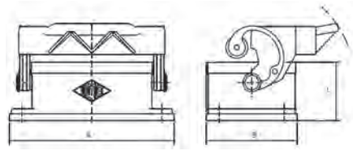

Part No.	# Poles	Levers	A	B	L	Size
CHI06L	6 Pole	Single	82,5	45,5	29	44.27
CHI10L	10 Pole	Single	95,5	45,5	29	57.27
CHI16L	16 Pole	Single	115,5	45,5	29	77.27
CHI24L	24 Pole	Single	142,5	45,5	29	104.27
CHI48L	48 Pole	Single	167,5	93	42	104.62

Surface Mount Base, Single Lever

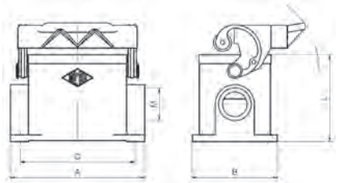

Part No.	# Poles	Levers	A	B	C	L	M	Size
MHP06L20	6 Pole	Single	82	52	70	53	M20	44.27
MHP10L20	10 Pole	Single	93,5	52	82	57	M20	57.27
MHP16L25	16 Pole	Single	117	57	105	63	M25	77.27
MHP24L25	24 Pole	Single	144	57	132	63	M25	104.27

Surface Mount Base, Single Lever and Cover

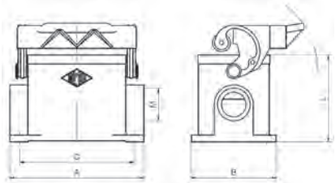

Part No.	# Poles	Levers	A	B	C	L	M	Size
MHP48LS40	48 Pole	Single	141	120	111	99	M40	104.62

Top Entry Hood, Double Lever

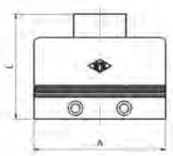

Part No.	# Poles	Levers	A	B	L	L1	M	Size
MHV10.20	10 Pole	Double	73	43	58	45	M20	57.27
MHV16.25	16 Pole	Double	93,5	43	58	45	M25	77.27
MHV24.32	24 Pole	Double	120	43	68	55	M32	104.27
MHV32.32	32 Pole	Double	93,5	82,5	117	94	M32	77.62

Temperature Control | Connectors *Standard Connectors*

Hot Runner Controllers 113
Heater Bands 117
Thermocouples 122
Connectors **125**
Cable Cutter and Stripper 137
Cable Glands 138
Cables 139
Thermometers 140
Thermal Cameras 142

Side Entry Hood, Double Lever

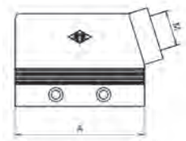

Part No.	# Poles	Levers	A	B	L	M	Size
MHO10.20	10 Pole	Double	73	43	52	M20	57.27
MHO16.25	16 Pole	Double	93,5	43	63	M25	77.27
MHO24.32	24 Pole	Double	120	43	63	M32	104.27
MHO32.32	32 Pole	Double	93,5	82,5	94	M32	77.62

Panel Mount Base, Double Lever

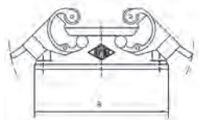
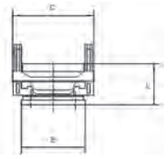

Part No.	# Poles	Levers	A	B	C	L	Size
CHI10	10 Pole	Double	95,5	45,5	58	29	57.27
CHI16	16 Pole	Double	115,5	45,5	58	29	77.27
CHI24	24 Pole	Double	142,5	45,5	58	29	104.27
CHI32	32 Pole	Double	126	45,5	98,5	35	77.62

Surface Mount Base, Double Lever

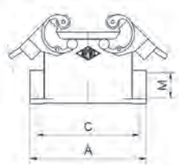
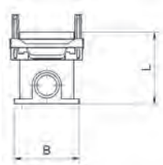

Part No.	# Poles	Levers	A	B	C	L	M	Size
MHP10.20	10 Pole	Double	93,5	52	82	57	M20	57.27
MHP16.25	16 Pole	Double	117	57	105	63	M25	77.27
MHP24.25	24 Pole	Double	144	57	132	63	M25	104.27
MHP32.40	32 Pole	Double	125	84	112	90	M40	77.62

Hot Runner Controllers	113	**Connectors**	**125**	Cables	139
Heater Bands	117	Cable Cutter and Stripper	137	Thermometers	140
Thermocouples	122	Cable Glands	138	Thermal Cameras	142

Inserts Male, 3 Row, High Density Crimp Terminal

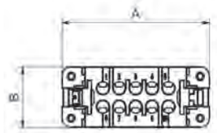

Part No.	# Poles	A	B	L	Size
CDM25	25 Pole	73	23	31	66.16

Inserts Female, 3 Row, High Density Crimp Terminal

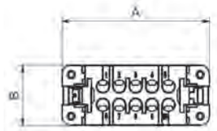

Part No.	# Poles	A	B	L	Size
CDF25	25 Pole	73	23	31	66.16

Crimp Pins

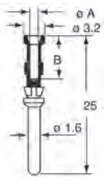

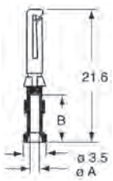

Part No.	Type	Wire Size	ø-A	ø-B
CDMA0.5	Male	0,5 mm²	1,1	8
CDFA0.5	Female	0,5 mm²	1,1	8
CDMA1.5	Male	1,5 mm²	1,8	8
CDFA1.5	Female	1,5 mm²	1,8	8

Temperature Control | Connectors *High Density Connectors*

Hot Runner Controllers	113	**Connectors**	**125**	Cables	139
Heater Bands	117	Cable Cutter and Stripper	137	Thermometers	140
Thermocouples	122	Cable Glands	138	Thermal Cameras	142

Top Entry Hood, Single Lever

Part No.	# Poles	Levers	A	B	C	L	L1	M	Size
MZAV25L20	16/25 Pole	Single	88,5	36	79,5	70,5	14,5	M20	66.16
MZAV25L25	16/25 Pole	Single	88,5	36	79,5	70,5	14,5	M25	66.16

Side Entry Hood, Single Lever

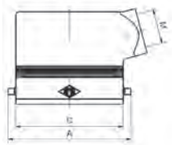

Part No.	# Poles	Levers	A	B	C	L	M	Size
MZO25L25	16/25 Pole	Single	88,5	29,4	79,5	55,9	M25	66.16

Panel Mount Housing, Single Lever

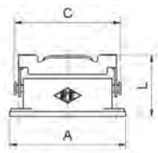

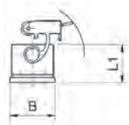

Part No.	# Poles	Levers	A	B	C	L	Size
CZI25L	16/25 Pole	Single	98	32	93	44	66.16

Surface Mount Housing, Single Lever

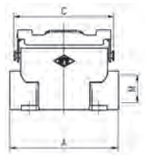
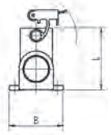

Part No.	# Poles	Levers	A	B	C	L	M	Size
MZAP25L25	16/25 Pole	Single	101	50	93	57	M25	66.16

4 Temperature Control

Mini Connnector

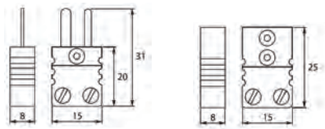

Part No. Male	Part No. Female	Type	Color	Positive Contact Material	Negative Contact Material
TCPJM	**TCSJM**	J (IEC 584)	Black	Iron	Constantan

Material: High-temperature thermoplastic reinforced with fiberglass, designed to withstand continuous exposure to 200°C.
Easy and secure wire connection.
Polarity marking to prevent connection errors.
Compatible with wire diameters from 0.2 to 2.0 mm.
Maximum cable diameter: 8 mm.

Standard Connector

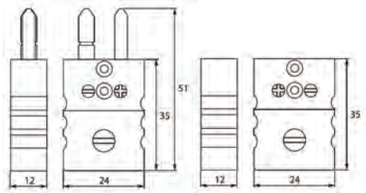

Part No. Male	Part No. Female	Type	Color	Positive Contact Material	Negative Contact Material
TCPJ	**TCSJ**	J (IEC 584)	Black	Iron	Constantan

Material: High-temperature thermoplastic reinforced with fiberglass, capable of withstanding continuous exposure to 200°C.
Easy wire connection.
Polarity marking to prevent connection errors.
Compatible with wire diameters from 0.2 to 2.0 mm.
Maximum cable diameter: 8 mm.

Connectors

B2

A92

B3

A93

B4P

B5P

B5

STASI3 *

Type	Part No.	Intensity (A)	Configuration
Silicone	**B2**	16	Straight
Silicone	**A92**	16	Angled 90° Plug
Female Plug with Aluminum Housing and Ceramic Insulation	**B3**	25	Straight
Female Plug with Aluminum Housing and Ceramic Insulation	**A93**	25	Angled 90°
3-Flat-Pin Plugs with Ceramic Insulation	**B4P**	16	Straight
Extension Cord Plugs, 3 Poles	**B5P**	16	Female
Extension Cord Plugs	**B5**	16	Male
* Clamp for B5 and B5P	**STASI3**		

Ceramic Terminals

Part No.	Ø Cable	Number of Wires	Dimensions (mm)
BS1	3,6	2	24 x 20 x 16
BS2	5,6	2	33 x 30 x 23
BS3	5,6	3	50 x 30 x 23

High-Temperature Ceramic Terminal Blocks.
For 6 mm² or 16 mm² cables, available in 2-wire or 3-wire versions.

Nylon Cable Ties

Part No.	Ø Max. (mm)	L (mm)
CT4	20,60	101,6
CT11	76,20	280
CT14	101,60	355

General-Purpose Nylon 6/6 Cable Ties provide an easy and flexible solution for cable bundling.

Natural color:
- Efficient locking system.
- Tapered tip for easier insertion.
- UL approved.

Standard Cable Ties:
- 100 per pack, natural color.
- The releasable version offers a wide clamping range.

Tape

Part No.	Description	Width x length (mm)	Insulation (V)	Temperature range
HHWT1	Adhesive tape with glass fibre coating - High temperature	12 x 33	2500	180°C
HHWT2	Adhesive tape with glass fibre coating - High temperature	19 x 33	2500	180°C
PVCT	Black PVC film coated with a transparent adhesive resin	19 x 25	9000	0° / 90°C

Cable Cutter

Part No.	Max Cut	Length	
CC-2200	60mm²	230 mm / 9"	1

- Made of high carbon steel
- Can cut 60mm² copper wire
- Heavy duty cable cutter
- Easy to cut hard cable
- Precision cutting edge
- Drop forged and heat treated, easy to hold
- Can crimp terminal
- Length: 230mm

Wire Stripper

Part No.	Max Cut	Length	
WS-1020	0,8-2,6	156 mm	1

- Length: 156mm
- Weight: 129g
- Material of stripper: SK7 High carbon steel
- Hardness: 48-51
- Material of handle: PVC
- For wires 0.8, 1, 1.3, 1.6, 2, 2.6 mm (AWG 20#, 18#, 16#, 14#, 12#, 10#)

Hot Runner Controllers	113	Connectors	125	Cables	139
Heater Bands	117	Cable Cutter and Stripper	137	Thermometers	140
Thermocouples	122	**Cable Glands**	**138**	Thermal Cameras	142

Cable Glands Polyamide

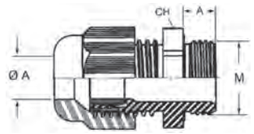

Part No.	Ø A (mm)	M	CH	A	
ASM20I	5-12,5	M20	24	10	1
ASM25I	9-18	M25	33	10	1
ASM32I	14-25	M32	42	10	1

A Polyamide based cable gland, designed for universal use.

Benefits
High oil-resistance for maximum reliability. Wide, variable clamping ranges. Permanent vibration protection. Optimum strain relief.

Cable Glands Polyamide - with Spiral Strain Relief

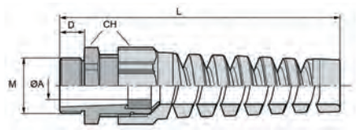

Part No.	Ø A (mm)	M	CH	L	D	
CGSS20	7-13	M20	24	101	8	1
CGSS25	9-17	M25	33	125	9	1
CGSS32	11-22	M32	42	149	10	1

Plastic cable gland with bending and anti-kink protection, to protect flexible cables, for moving machine parts.

Benefits
Reliable bending and anti-kink protection. Functional reliability. Cable conservation. To protect flexible cables.

Cable Glands

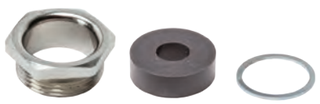

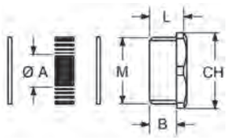

Part No.	Ø A (mm)	M	CH	L	B	
AGM20T	6-10	M20	20	10,5	7,5	1
AGM25T	11-17	M25	25	11,5	8	1
AGM32T	19-24	M32	32	12	8	1

Metal cable gland with gasket to ensure sealed connection between cable and connector.

Benefits
IP65. Nickel plated brass gland. Galvanised steel washers. Temperature range: -25°C - +100°C. Anti-ageing rubber gaskets.

Cable Glands

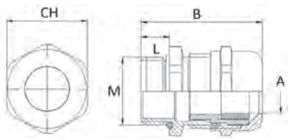

Part No.	Ø A (mm)	M	CH	L	B	
ASM20P	6-12,5	M20	22	7	29	1
ASM25P	10-18	M25	30	8	37	1
ASM32P	14-24	M32	40	8,5	45	1

Metal cable gland with gasket to ensure sealed connection between cable and connector.

Benefits
IP65. Nickel plated brass gland. Temperature range: -25°C - +120°C. Anti-ageing rubber gaskets.

Hot Runner Controllers	113	Connectors	125	**Cables**	**139**
Heater Bands	117	Cable Cutter and Stripper	137	Thermometers	140
Thermocouples	122	Cable Glands	138	Thermal Cameras	142

Powerflex Cable

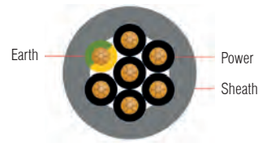

Part No.	Zones	Cores	Coil Length
PF08	8	16+E	20m
PF12	12	24+E	20m

Multicore Power Cable.
1.5mm² 16A Cable.
Numbered Cores, Green/Yellow Earth.

High Temperature Cable

Part No.	Zones	Cores	Coil Length
CAB-P325	1	2+E	25m

Power Cable for high temperature applications including extension of heater cables.
3 x 0,75 mm².
Nickel conductors, insulated with fiberglass impregnated in silicone resin.
Galvanized steel braiding.
Working Temperature: Max 320°C.

Thermoflex Cable

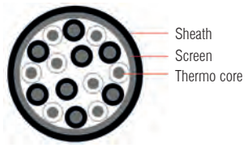

Part No.	Zones	Cores	Coil Length
TF08	8	8 Pair+E	20m
TF12	12	12Pair+E	20m

Multi-core Thermocouple Cable.
Type J Fe/Cu-Ni, Twisted Pairs.
DIN Standard Colours (Black/White), Numbered Cores.
Screen and Earth.

Thermocouple Cable Type J

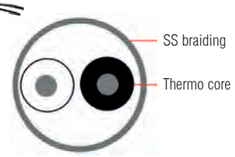

Part No.	Zones	Cores	Coil Length
CAB-T225	1	2	25m

Thermocouple Cable Type J FeCuNi.
2 x 0,5 mm2 Black/White.
Stainless steel braiding.
Working Temperature: Max 250°C.

Multiflex Cable

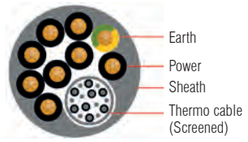

Part No.	Zones	Cores	Coil Length
MF06	6	12+E PWR / 6 Pair T/C	20m

6 Zone Combination power and thermocouple cable.
Extremely Flexible.
1.5mm² 16A Power Cable.
Type J Fe/Cu-Ni Thermocouple Cable, Twisted Pairs.
DIN Standard Colours (Black/White), Numbered Cores.
Screen and Earth.

Hot Runner Controllers	113	Connectors	125	Cables	139
Heater Bands	117	Cable Cutter and Stripper	137	**Thermometers**	**140**
Thermocouples	122	Cable Glands	138	Thermal Cameras	142

Thermometer

Part No.	Input	Temperature range
DT6102K	Dual	-50°C to + 1300°C

Dual Input K-Type thermometers offer high accuracy and fast response times; ideal for plastics processors.
-50° to +1300°.
°C / °F Selectable.
Resolution: 0.1°C / 0.1°F.
Sampling rate of 2.5 times per second.
Auto Power Off.
Supplied with carry case, rubber holster, bead probe & battery.

Thermometer Kit

Part No.	Temperature range
826-32	-50°C to + 1300°C

Single Input K-Type thermometers offer high accuracy and fast response times; ideal for plastics processors.
-50° to +1300°.
°C / °F Selectable.
Resolution: 0.1°C / 0.1°F.
Sampling rate of 2.5 times per second.
Auto Power Off.
Supplied with carry case, rubber holster & battery.
Kit Includes: Thermometer (Single Input), Case, Needle Point Penetration Probe, Right Angle Surface probe, Batteries.

Hot Runner Controllers	113	Connectors	125	Cables	139
Heater Bands	117	Cable Cutter and Stripper	137	**Thermometers**	**140**
Thermocouples	122	Cable Glands	138	Thermal Cameras	142

Infrared and Probe Thermometer Kit

Part No.	Temperature range
826-31	-60°C to +480°C

Ideal for all temperature measurement requirements around the mouldshop this dual purpose infrared thermometer also has a Type K thermocouple input socket.
The kit is supplied in a case complete with penetration probe and 90° ribbon surface probe. Ideal for measuring surface temperature of moulded parts, mould surface temperature or melt temperature.
Range (Infrared) -60°C to +480°C.
Range (Thermocouple) -60°C to +480°C.
Backlit LCD display.
Laser Pointer.
Auto power off (60 secs).
Adjustable Emissivity.

Deluxe Thermometer Kit

Part No.	Temperature range
826-33	-50°C to + 480°C/1300°C

Dual Input K-Type thermometers offer high accuracy and fast response times; ideal for plastics processors.
50° to 1300°.
°C / °F Selectable.
Resolution: 0.1°C / 0.1°F.
Sampling rate of 2.5 times per second.
Auto Power Off.
Supplied with carry case, rubber holster & battery.
Kit Includes: Thermometer (Single Input), Case, Needle Point Penetration Probe, Right Angle Surface probe, Magnetic Surface Probe, Batteries.

Handheld 90 Degree Ribbon Surface Probe

Part No.	Type	Max Temp	Lead Type
TCP-RS90-K	K	500°C	Flexible

Handheld Pentration Probe

Part No.	Type	Max Temp	Lead Type
TCP-P-K	K	500°C	Flexible

Magnetic Surface Probe

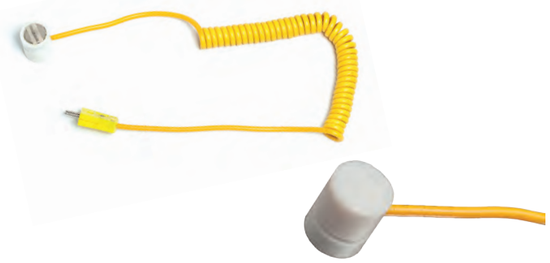

Part No.	Type	Max Temp	Lead Type
TCP-R-M	K	350°C	Flexible

Hot Runner Controllers	113	Connectors	125	Cables	139
Heater Bands	117	Cable Cutter and Stripper	137	Thermometers	140
Thermocouples	122	Cable Glands	138	**Thermal Cameras**	**142**

DT-870

Bluetooth

Used for a multitude of temperature related applications, you can use our highly durable, fast capturing imager to help troubleshoot any possible heating and cooling problems.

DT-986H

Bluetooth and WiFi

Point the camera at polymer melt to get an almost instantaneous reading or even take an image of the cooling hoses and quickly identify a 'cold' hose and a possible cooling issue.

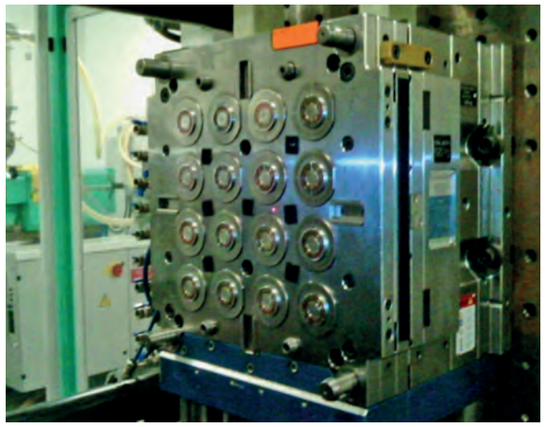

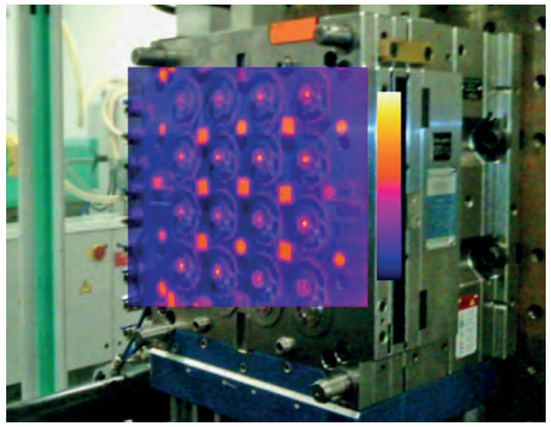

Temperature Control | Thermal Cameras

Hot Runner Controllers	113	Connectors	125	Cables	139
Heater Bands	117	Cable Cutter and Stripper	137	Thermometers	140
Thermocouples	122	Cable Glands	138	**Thermal Cameras**	**142**

Specifications	DT-870	DT-986H
Imaging and optical data		
IR resolution	80×80 pixels	256×192 pixels
Focal Plane Array (FPA) / Spectral range	Uncooled microbolometer / 8–14 μm	Uncooled microbolometer / 8–14 μm
Focal length	7.5mm.	3,2mm
Field of View (FOV)	21x 21°	36x27°
Minimum focus distance	0.5m	0.5m
Spatial resolution	4.53mrad	3.75mrad
Thermal sensitivity/NETD	<0.1°C/100mK	<0.1°C at 30°C [86°F]/100mK
Image frequency	50Hz	25Hz
Focus	Focus Free	Focus Free
Zoom	-	1-16x continuous, digital zoom
Image presentation		
Display	2" TFT LCD, 240x320 pixels	3,5" LCD Touch, 640x480 pixels
Image modes	IR image	IR image, visual image, picture in picture, AUF
Picture in Picture	-	IR area on visual image
Color palettes	IRON/Rainbow/Grey/Grey Inverted	IRON, Rainbow, Grey, Grey Inverted, Brown, Blue-red, Hot-cold, Feather, Above alarm, Below alarm, Zone alarm, Vision zone
Measurement		
Object temperature range	–20 to 150°C / 0 to 350°C / extended to –20 to 650°C	–20 to 550°C
Accuracy	±2°C or ±2% of reading	±2°C or ±2% of reading
Measurement analysis		
Spotmeter	Center Spot	Center Spot, Auto hot or cold markers
Set-up		
Language selection	English, Chinese, French, German, Spanish	
Storage of videos/images		
Inside Memory / Storage media	Internal Storage	8Gbytes Micro SD card ar 3.4GB internal EMMC
Video storage format	-	Standard MPEG-4 encode, 640x480 at 30fps, an memory card >60 minutes
Image storage format	Bitmap (BMP)	Standard JPEG.ar HIR files including measurement data, an memory card >6000 pictures
Digital camera		
Built-in visible light digital camera	-	2 Megapixels; FOV 65°
Data communication interfaces		
Interfaces &Video output	USB-micro	USB-Type C
USB	Data	Data & Live video transform between camera and PC or smartphone
Bluetooth	Yes	Yes
WiFi		
Live video between device and PC	No	Yes
Transfer images and data to mobile devices	(Bluetooth only)	Yes
Battery / Input voltage / Laser		
	Li-ion battery, 4 hours operating time / DC 5V / < 1mW	

D-870 / D-986H
Hand-held thermal imaging camera is designed to make your work easier by providing accurate, fast and reliable temperature measurement. Simple and easy to operate the camera uses point and shoot infrared technology to produce high-quality thermal images that are displayed on the TFT screen. 50/25Hz fast frame rate enables fast capture of temperature variation where critical temperature conditions are directly displayed with automatic hot/cold spot recognition. The camera has the ability for datalogging via the internal memory while Bluetooth connectivity allows the for easy transfer of data to the user's smartphone or Bluetooth device. The smart design is robust, compact and lightweight with the camera being able to withstand drops from up to 2m.

Thermal imaging cameras may be used for a multitude of temperature related applications; use the camera around the mouldshop to measure part ejection temperature, check heater-band temperatures and also troubleshoot possible cooling problems or dryer temperatures simply by measuring the hose temperature; these may not give exact readings but, are a great way to quickly identify possible problems and are an invaluable aid to process verification. The camera will quickly identify the temperature of polymer melt temperature – giving an almost instantaneous reading – in comparison a melt probe can take up to 30 seconds for the reading to stabilise.

The built-in LED flashlight is convenient when working in dark and unlit inspection environments.
8 hour battery life with the rechargeable battery and automatic shutdown.
Easy-to-use interface, this unit is ideal for monitoring process parameters, predictive maintenance, equipment troubleshooting and verification.
The compact, rugged and lightweight design allows for optimum portability and performance, even in harsh working conditions.

D-986H
2 Megapixel built-in digital camera enables the overlaying of digital and thermal images as well as the more advanced fusion mode.
3,4 Gb internal memory (Standard MPEG-4 encode, 640x480 at 30fps, an memory card >60 minutes. video using the 8GB micro SD Card, Video output via USB or HDMI.

4 hour battery life with the rechargeable battery and automatic shutdown.
Easy-to-use interface, this unit is ideal for monitoring process parameters, predictive maintenance, equipment troubleshooting and verification.
The compact, rugged and lightweight design allows for optimum portability and performance, even in harsh working conditions.

Supplied with adaptor, battery, App software, USB cable and convenient carry case.

4

Temperature Control

05. Material Handling

145 Loader Hoses

146 Hot Air Hoses

147 Hose Clamps

148 Camlock Couplings Aluminum

150 Hopper Magnets

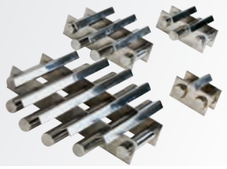

150 Material Scoops

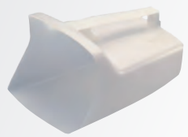

151 Balances and Moisture Analyser

Loader Hoses	**145**	Hopper Magnets	150
Hot Air Hoses	146	Material Scoops	150
Hose Clamps	147	Balances and Moisture Analyser	151
Camlock Couplings Aluminum	148		

Anti-Static PU Hose/PVC Helix

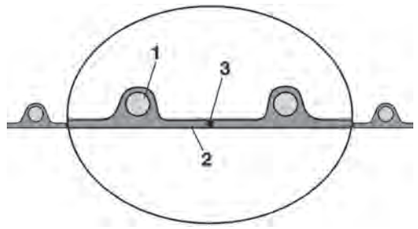

Part No.	Ø ID (mm)	Ø OD (mm)	Min Wall thickness (mm)	Bending Radius (mm)	Roll Length (m)	Wire Clip Ref
PUP32	32	38	0.5	19	10	3030218
PUP38	38	44	0.5	31,0	10	3030242
PUP40	40	47	0.5	40,0	10	3030242
PUP45	45	51	0.5	42,5	10	3030250
PUP50	50	58	0.5	45,0	10	3030285
PUP60	60	71	0.5	50,0	10	3030306
PUP64	64	74	0.5	49	10	3030306

Applications:
Flexible hose/ ducting for abrasive granulate and powder.

Properties:
- Light weight.
- Abrasion-resistant.
- Microbe resistant.
- Good resistance to chemicals.
- Phthalate-free.
- Grounding wire for discharging of electrostatic charging.

Temperature range:
-20°C to 70°C.
Short time to 80°C.

Design, Material:
1. hard plastic spiral integrated in wall, spiral: rigid PVC.
2. smooth interior, wall: permanently antistatic premium ester-polyurethane (Pre-PUR®).
3. grounding wire.

PU Hose/Steel Helix

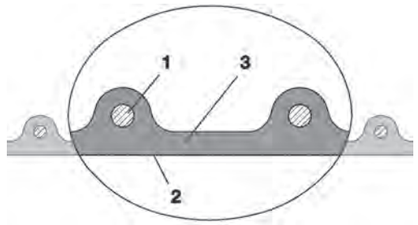

Part No.	Ø ID (mm)	Ø OD (mm)	Min Wall thickness (mm)	Roll Length (m)	Wire Clip Ref
PURH32	32	39	1,5	10	3030242
PURH38	38	49	1,5	10	3030250
PURH40	40	51	1,5	10	3030250
PURH45	45	55	1,5	10	3030269
PURH50	50	58	1,5	10	3030285
PURH60	60	70	1,5	10	3030306
PURH64	64	75	1,5	10	3030306

Applications:
- Flexible hose/ ducting for high throughput of abrasive powder, bulk material, granulate and for gases.
- Plastic industry, conveying of granulates and powders: granulate conveying device, vacuum hopper/ conveyor, suction conveyor, dosing system, bulk-bag (big bag)-charging and discharging, shredder, mill, extruder, injection moulding machine.

Properties:
- Heavy duty.
- Highly abrasion resistant.
- Increased pressure and vacuum resistance.
- Microbe resistant.
- Good resistance to oil, gasoline and chemicals.
- Very good low temperature flexibility.

Temperature range:
-40°C to 90°C.
Short time to 125°C.

Design, Material:
1. copper coated spring steel wire firmly embedded in wall.
2. wall: permanently antistatic premium esterpolyurethane (Pre-PUR®).
3. wall thickness 1,4 - 1,5 mm approx.

Loader Hoses	**145**	Hopper Magnets	150
Hot Air Hoses	**146**	Material Scoops	150
Hose Clamps	147	Balances and Moisture Analyser	151
Camlock Couplings Aluminum	148		

PVC Hose

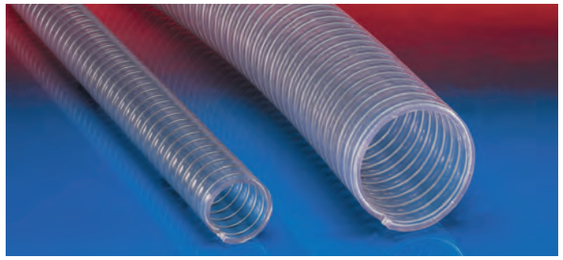

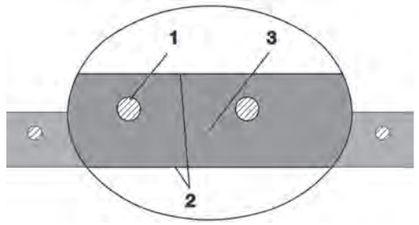

Part No.	Ø ID (mm)	Ø OD (mm)	Bending Radius	Roll Length	Clamp Ref.
PAPVC19	20	27	41	30	HDC2325
PAPVC25	25	33	73	30	HDC3134
PAPVC31	32	40,4	79,0	30	HDC3740
PAPVC38	38	47	91	30	HDC4347
PAPVC40	40	49	100	30	HDC4751
PAPVC45	45	54	118	30	HDC5155
PAPVC50	50	60	135	30	HDC5963
PAPVC64	64	74,8	228,0	30	HDC7379

Applications:
Plastic industry, conveying of granulates and powders: granulate conveying device, vacuum hopper/ conveyor, suction conveyor, dosing system, bulk-bag (big bag)-charging and discharging, shredder, mill, extruder, injection moulding machine.

Properties:
- Heavy duty.
- Very high pressure, vacuum and compression resistance.
- Food grade wall, complies with: EU-Directive 10/2011 and EC 1935/2004 and the latest EU-Directive 2015/174, according to FDA 21 CFR, according to FDA 21 CFR, 177.1210.
- Good resistance to alkalis and acids.
- Good resistance to chemicals.
- Phthalate-free.

Temperature range:
-20°C to 70°C.
Short time to 80°C.

Design, Material:
1. spring steel wire spiral embedded in wall.
2. smooth interior and exterior, wall: high grade soft PVC.
3. wall thickness 3 to 8 mm approx., depending on diameter.

Silicon Dryer Hose

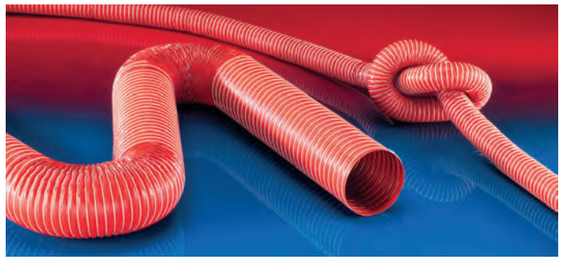

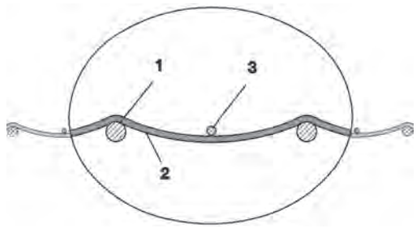

Part No.	Ø ID (mm)	Ø OD (mm)	Bending Radius	Roll Length	Clamp Ref.
SIL132	32	35	19	4	3030200
SIL138	38	42	23	4	3030226
SIL141	41	45,0	25,0	4	3030234
SIL151	51	55	30	4	3030269
SIL160	63	67	36	4	3030285
SIL170	70	74	39	4	3030306

Applications:
- Flexible hose/ ducting for hot and cold gases.
- Granulate/ plastic dryer, hot air dryer.
- Film blowing machine, cooling air at the extrusion tool.
- Air supply: UV dryer, IR dryer.
- Clean room ventilation, semiconductor production machine.

Properties:
- Fibre reinforced.
- Highly flexible.
- Very good heat resistance.
- Conforms to RoHS guideline.

Temperature range:
-70°C to 260°C.
Short time to 280°C.

Design, Material:
Silicon hose.
1. spring steel wire.
2. fabric-reinforced tape, wall: Silicon coated glass fabric.
3. cord as reinforcement.

Loader Hoses	145	Hopper Magnets	150
Hot Air Hoses	146	Material Scoops	150
Hose Clamps	**147**	Balances and Moisture Analyser	151
Camlock Couplings Aluminum	148		

Hose Clamps Heavy Duty

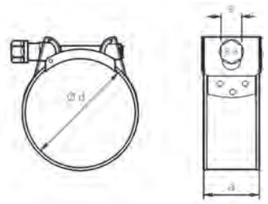

STAINLESS STEEL

Part No.	Ø	e	a		Hose ref.
HDC2325	23-25	8	18	50	PAPVC19
HDC3134	31-34	11	20	50	PAPVC25
HDC3740	37-40	11	20	50	PAPVC31
HDC4347	43-47	11	20	50	PAPVC38-40
HDC5155	51-55	11	20	25	PAPVC45
HDC5963	59-63	11	20	25	PAPVC50
HDC7379	73-79	13	25	25	PAPVC64
HDC8591	85-91	13	25	25	PAPVC75

Wire Clip with Screw
– Ideal for Loader Hoses with Outer Helix

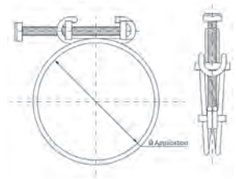

Part No.	Size range mm
3030200	33-37
3030218	35,5-40
3030226	38,5-43
3030234	41-46
3030242	43,5-49
3030250	46,5-53
3030269	50,5-56
3030277	53,5-60
3030285	56,5-64
3030293	60-68
3030306	64-72

Wire: Steel wire B-UNI 3823
Screw: 6.6 grade steel Cr3 zinc-plated

This clip was specially designed for use with hoses incorporating an outer helix.
It is generally used when installing ventilation ducting.
The double-wire construction of this clip means that it sits comfortably on either side of the helix and can then be clamped down firmly thanks to the screw-tightening system.

Loader Hoses 145
Hot Air Hoses 146
Hose Clamps 147
Camlock Couplings Aluminum 148
Hopper Magnets 150
Material Scoops 150
Balances and Moisture Analyser 151

Camlock Couplings Aluminium

A range of Camlock couplings made according to A-A-59326, DIN 2828. Camlock is a safe coupling for use with hoses and pipes for many different media such as dry goods, polymer granules, cooling water, chemicals etc.
The coupling connects easily by opening the wings, inserting the male part and then closing the wings by hand.

- Body material: Aluminium A356 or A104
- Handle material: Brass
- Sealing: NBR

Hose Tail Lever Coupling Type C

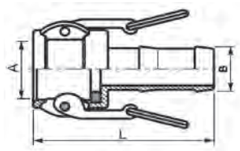

Part No.	Size	B	A	L	Max pressure
MPC-HC19	75	3/4"|19 mm.	32,4	91	17 bar
MPC-HC25	100	1"|25 mm.	37,2	105	17 bar
MPC-HC32	125	1.1/4"|32 mm.	46	112	17 bar
MPC-HC38	150	1.1/2"|38 mm.	53,9	118	17 bar
MPC-HC50	200	2"|50 mm.	63,7	135	17 Bar
MPC-HC64	250	2.1/2"|64 mm.	76,4	147	10 bar
MPC-HC75	300	3"|75 mm.	92,1	162	8 bar

Male Threaded Lever Coupling Type B

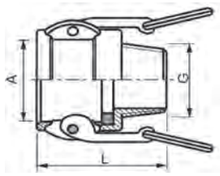

Part No.	Size	G	A	L	Max pressure
MPC-MC3/4	75	3/4"	32,4	47	17 bar
MPC-MC1	100	1"	37,2	56	17 bar
MPC-MC1-1/4	125	1.1/4"	46	64	17 bar
MPC-MC1-1/2	150	1.1/2"	53,9	66	17 bar
MPC-MC2	200	2"	63,7	76	17 Bar
MPC-MC2-1/2	250	2.1/2"	76,4	83	10 bar
MPC-MC3	300	3"	92,1	87	8 bar

Female Threaded Lever Coupling Type D

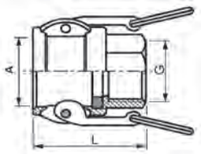

Part No.	Size	B	A	L	Max pressure
MPC-FC3/4	75	3/4"	32,4	47	17 bar
MPC-FC1	100	1"	37,2	56	17 bar
MPC-FC1-1/4	125	1.1/4"	46	64	17 bar
MPC-FC1-1/2	150	1.1/2"	53,9	67	17 bar
MPC-FC2	200	2"	63,7	76	17 Bar
MPC-FC2-1/2	250	2.1/2"	76,4	83	10 bar
MPC-FC3	300	3"	92,1	87	8 bar

Pipe Connection Lever Coupling Type D

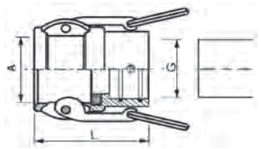

Part No.	Size	G	A	L	Max pressure
MPC-FC40	150	40	53,9	67	17 bar
MPC-FC50	200	50	63,7	76	17 Bar
MPC-FC60	250	60	76,4	83	10 bar

Dust Cap Lever Coupling Type DC

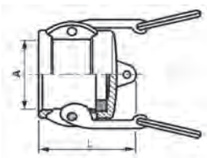

Part No.	Size	A	L	Max pressure
MPC-DC3/4	75	32,4	32	17 bar
MPC-DC1	100	37,2	40	17 bar
MPC-DC1-1/4	125	46	46	17 bar
MPC-DC1-1/2	150	53,9	48	17 bar
MPC-DC2	200	63,7	55	17 Bar
MPC-DC2-1/2	250	76,4	57	10 bar
MPC-DC3	300	92,1	59	8 bar

Material Handling | Camlock Couplings Aluminium

Loader Hoses 145
Hot Air Hoses 146
Hose Clamps 147
Camlock Couplings Aluminum 148
Hopper Magnets 150
Material Scoops 150
Balances and Moisture Analyser 151

Gaskets for Camlock Couplers

Part No. NBR	Size	Dimension (mm)
G3/4 NBR	3/4"	35 x 22 x 5.5
G1NBR	1"	40 x 27 x 6.4
G1-1/4NBR	1-1/4"	50 x 35 x 6.4
G1-1/2NBR	1-1/2"	56 x 41 x 6.4
G2NBR	2"	67 x 51 x 6.4
G2-1/2NBR	2-1/2"	80 x 64 x 6.4
G3NBR	3"	95 x 76 x 6.4

Hosetail Plug Type E

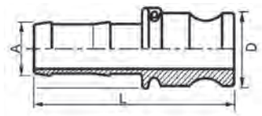

Part No.	Size	A	D	L	Max pressure
MPC-HP3/4	75	3/4"|19 mm.	32,1	86	17 bar
MPC-HP1	100	1"|25 mm.	36,7	103	17 bar
MPC-HP1-1/4	125	1.1/4"|32 mm.	45,5	107	17 bar
MPC-HP1-1/2	150	1.1/2"|38 mm.	53,4	114	17 bar
MPC-HP2	200	2"|50 mm.	63,1	131	17 Bar
MPC-HP2-1/2	250	2.1/2"|64 mm.	75,8	142	10 bar
MPC-HP3	300	3"|75 mm.	91,5	168	8 bar

Male Threaded Plug Type F

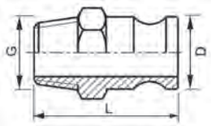

Part No.	Size	G	D	L	Max pressure
MPC-MP3/4	75	3/4"	32,1	55	17 bar
MPC-MP1	100	1"	36,7	67	17 bar
MPC-MP1-1/4	125	1.1/4"	45,5	74	17 bar
MPC-MP1-1/2	150	1.1/2"	53,4	76	17 bar
MPC-MP2	200	2"	63,1	87	17 Bar
MPC-MP2-1/2	250	2.1/2"	75,8	97	10 bar
MPC-MP3	300	3"	91,5	100	8 bar

Female Threaded Plug Type A

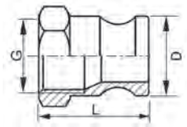

Part No.	Size	G	D	L	Max pressure
FPC-FP3/4	75	3/4"	32,1	40	17 bar
FPC-FP1	100	1"	36,7	48	17 bar
FPC-FP1-1/4	125	1.1/4"	45,5	54	17 bar
FPC-FP1-1/2	150	1.1/2"	53,4	56	17 bar
FPC-FP2	200	2"	63,1	63	17 Bar
FPC-FP2-1/2	250	2.1/2"	75,8	68	10 bar
FPC-FP3	300	3"	91,5	69	8 bar

Pipe Connection Plug Type A

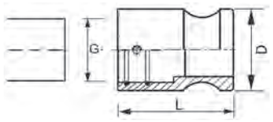

Part No.	Size	G	D	L	Max pressure
MPC-PP40	150	40	53,4	76	17 bar
MPC-PP50	200	50	63,1	87	17 Bar
MPC-PP60	250	60	75,8	97	10 bar

Dust Plug Type DP

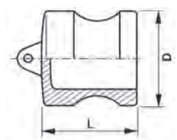

Part No.	Size	D	L	Max pressure
DPC-DP3/4	75	32,1	28	17 bar
DPC-DP1	100	36,7	35	17 bar
DPC-DP1-1/4	125	45,5	38	17 bar
DPC-DP1-1/2	150	53,4	40	17 bar
DPC-DP2	200	63,1	49	17 Bar
DPC-DP2-1/2	250	75,8	50	10 bar
DPC-DP3	300	91,5	51	8 bar

Loader Hoses 145
Hot Air Hoses 146
Hose Clamps 147
Camlock Couplings Aluminum 148
Hopper Magnets 150
Material Scoops 150
Balances and Moisture Analyser 151

Hopper Magnets – Round Model

STAINLESS STEEL

Part No.	Dia Ø	Height	# Bars	Type	Strength (Gauss)	Weight(Kg)
D100	100	40	2	Standard	2500	0.9
D100-ES	100	40	2	Extra Strong	10000	0.9
D150	150	40	3	Standard	2500	1.5
D150-ES	150	40	3	Extra Strong	10000	1.5
D200	200	40	4	Standard	2500	2.5
D200-ES	200	40	4	Extra Strong	10000	2.5
D250	250	40	5	Standard	2500	3.7
D250-ES	250	40	5	Extra Strong	10000	3.7
D300	300	40	6	Standard	2500	5.5
D300-ES	300	40	6	Extra Strong	10000	5.5

Materials:
Standard: Samarium - Cobalt.
Extra Strong: Neodymium Iron-Boron.
Stainless Steel encased.
Place direct in the Hopper to separate metal from polymers and avoid damage of nozzle and hotrunners etc.

Hopper Magnets – Square Model

Part No.	L	W	Height	# Bars	Type	Strength (Gauss)
CHM100	100	100	40	2	Standard	2500
CHM150	150	150	40	3	Standard	2500
CHM200	200	200	40	4	Standard	2500
CHM250	250	250	40	5	Standard	2500

Materials:
Standard: Samarium - Cobalt.
Stainless Steel encased.
Place direct in the Hopper to separate metal from polymers and avoid damage of nozzle and hotrunners etc.

Material Scoop

Part No.	Size
2885	2,0 ltr

2,0 ltr Material Scoop.
Ideal for scooping granules and tipping into material hoppers.
Colour and design may differ.

Loader Hoses 145
Hot Air Hoses 146
Hose Clamps 147
Camlock Couplings Aluminum 148
Hopper Magnets 150
Material Scoops 150
Balances and Moisture Analyser 151

Compact Balance

Part No.	Capacity	Readability	Platform Size
MCB500	500 g	0,1 g	Ø 120 mm
MCB2000	2000 g	0,1 g	Ø 120 mm

Compact balance for weighing parts up to 2000 g.

Features:
Backlit LCD display.
Stainless steel pan.
ShockProtect™ overload three-point protection.
Can be stacked for storage.
Lock down mounting slot for Kensington™ type lock and cable.
Dual tare keys.
Lightweight and portable.
Colour coded, sealed keypad.
Modern low profile design.
Low cost and simple to use.
External calibration.
Auto sleep / power down function to save battery life.
Auto power off.
Low battery indication.
AC Adaptor.

Applications:
Weighing.
Percentage weighing.
Parts counting.
Below balance weighing.
Weight accumulation.

Precision Balance

Part No.	Capacity	Readability	Platform Size
MPB410	410 g	0,001 g	Ø 120 mm

Precision Balance for weighing parts with very accurate tolerance.

Features:
Backlit LCD display.
Colour coded keys.
Level indicator with adjustable levelling feet.
Removable draft shield supplied.
Robust metal housing.
Sealed keypad.
External calibration.
Pan lifter to easily.
remove samples.

Applications:
Weighing.
Net / Total.
Check weighing.
Percentage weighing.
Weight accumulation.
Parts counting.
Animal / dynamic weighing.
Density determinatio.
Below balance weighing.

Moisture Analyser

Part No.	Capacity	Readability	Platform Size
MMB65	65 g	0,001 g	Ø 100 mm

The MMB Moisture Analyser makes moisture analysis of plastic granules easy for fast and accurate results.
The moisture analyzer comprises of a balance and an integrated heater.
The analyser will first weigh the material sample in a foil tray at the start of the process; it will then heat the sample up, removing the moisture, and continue heating sample until it stops losing weight. This data is then used to calculate the moisture content based on the moisture loss rate, known as a drying curve.

Features:
USB port for memory card and USB I/O interface.
RS-232 interface.
Built-in memories for storing products and settings.
3 settings for heating sample, ramp up, step and standard.
Automatic test start setting for when the lid is closed.
Pan lifter to easily remove samples.
Large backlit display with dual text prompts.

Loader Hoses	145	Hopper Magnets	150
Hot Air Hoses	146	Material Scoops	150
Hose Clamps	147	**Balances and Moisture Analyser**	**151**
Camlock Couplings Aluminum	148		

Disposable Sample Pans

Part No.	Deep (mm)	
MMB-P50	10 mm	50

Aluminum sample pans are ideal for moisture analysis testing. The disposable pans fit neatly on the MMB moisture analysers pan holder.
They are 10mm deep to keep the items being weighed in place. This pack holds 50 disposable pans.

Calibration Weights

Part No.	Weight
CALW20G	20 g
CALW50G	50 g
CALW200G	200 g
CALW1000G	1000 g

Ideal for calibrating Scales and moisture analyser.

Thermal Printer

Part No.	Power Supply	Paper Width
ATP-100	110/230 VAC - 8,5 VDC	57,5

Mouldpro's ATP thermal printer is compact and ideally suited for use with balances and scales.
Simple-to-use features combined with quick set-up makes for a truly versatile printer.

Features:
- A single positive push-button feed key and three easy-to-read LED indicators make operation simple.
- Combined with the compact design, which takes little space on the bench, this makes the ATP the right choice for any printing applications.

Spare Paper:
No. ATP-100-1 Thermal paper.
No. ATP-100-10 Thermal paper (10pk).

06. End of Arm Tooling

End of Arm Tooling

Quick Change System	p. 156	Gripper Arms	p. 180	Finger Grippers	p. 218	Cylinders & Slides	p. 250
Profile & Channel Nuts	p. 162	Vacuum Cup Mounts	p. 184	General Purpose Grippers	p. 228	Fittings, Tube & Manifolds	p. 258
Profile Connectors	p. 166	Vacuum Cups	p. 194	Speciality Grippers	p. 234	Electronics & Sensors	p. 264
Clamps	p. 174	Clamps	p. 208	Nippers	p. 242		

156 Quick Change System

162 Profile & Channel Nuts

166 Profile Connectors

174 Clamps

180 Gripper Arms

184 Vacuum Cup Mounts

194 Vacuum Cups

208 Sprue Grippers

218 Finger Grippers

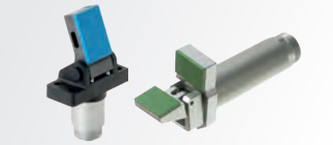

228 General Purpose Grippers

234 Speciality Grippers

242 Nippers

250 Cylinders & Slides

258 Fittings, Tube & Manifolds

264 Electronics & Sensors

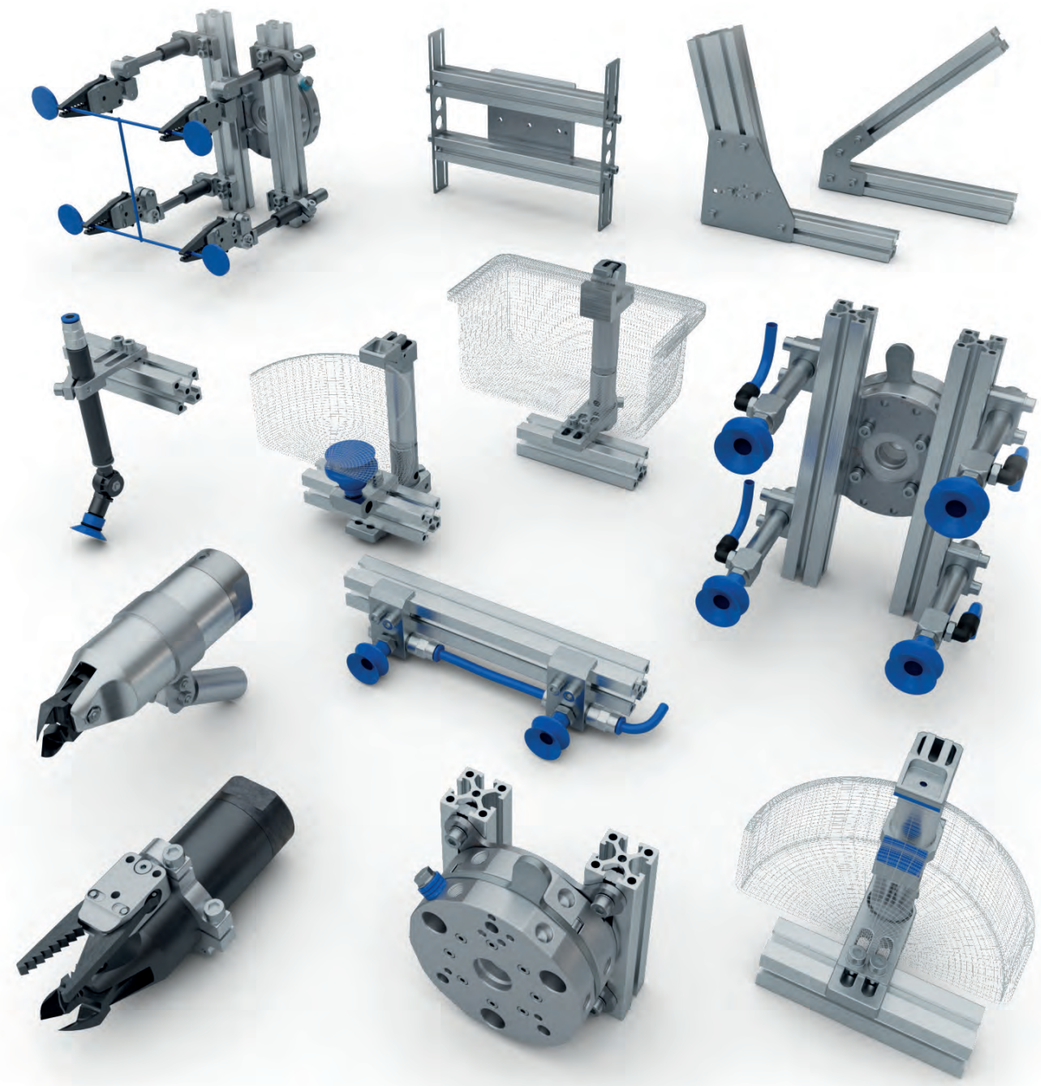

06. Quick Change System

157 Dovetail Quick Changers

157 EOAT Base Plates

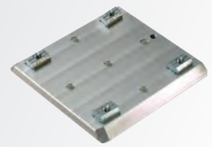

158 Wall Mounts – Dovetail

159 Round Quick Changers

159 Quick Changer Interfaces

160 Electrical Connectors

161 Wall Mounts – Round

161 Locating Pin

Dovetail Quick Changers p. 157
EOAT Base Plates p. 157
Wall Mounts – Dovetail p. 158
Round Quick Changers p. 159
Quick Changer Interfaces p. 159
Electrical Connectors p. 160
Wall Mounts – Round p. 161
Locating Pin p. 161

QC-RSW – Quick Changer Robot Side

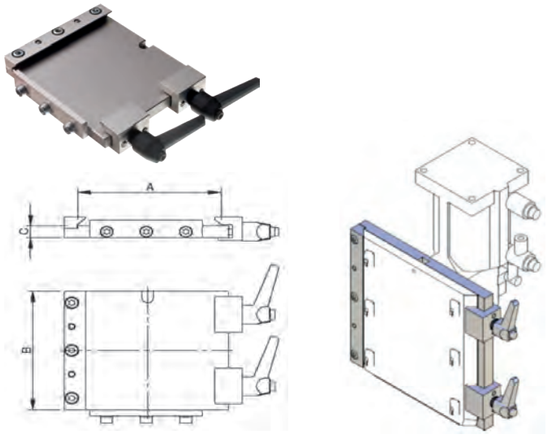

Part No.	A	B	C	Max load	Reference	Wteight (g)
QC-RSW-60-00	60	60	10	5 kg	QC-SSW-60	140
QC-RSW-100-00	100	100	10	10 kg	QC-SSW-100	495
QC-RSW-160-00	160	160	10	20 kg	QC-SSW-160	1136
QC-RSW-250-00	250	250	10	40 kg	QC-SSW-250	3072

Manual interface between robot and EOAT.
Works with all profile systems.

QC.LAL – Pneumatic Connection for Quick Changer QC-RSW

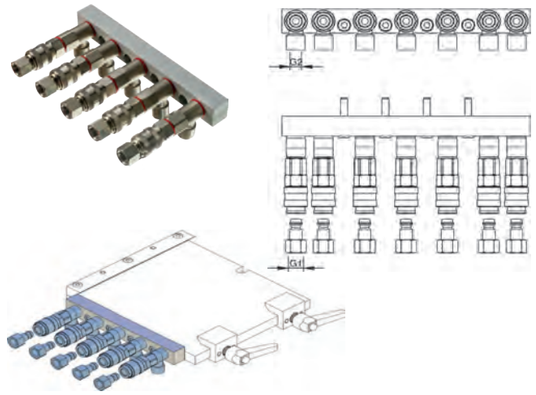

Part No.	G1	G2	No. of Connections	Reference	Weight (g)
CA.LAL.1.5	M5	M5	5	QC-RSW-100	154
CA.LAL.1.7	M5	M5	7	QC-RSW-100	225
CA.LAL.2.5	G 1/8	G1/8	5	QC-RSW-160	629
CA.LAL.2.7	G 1/8	G 1/8	7	QC-RSW-160	742
CA.LAL.3.6	G 1/4	G 1/4	6	QC-RSW-250	902
CA.LAL.3.8	G 1/4	G 1/4	8	QC-RSW-250	1503

Couplers are Standard "Rectus 21" series.

QC-SSW – EOAT Base Plate

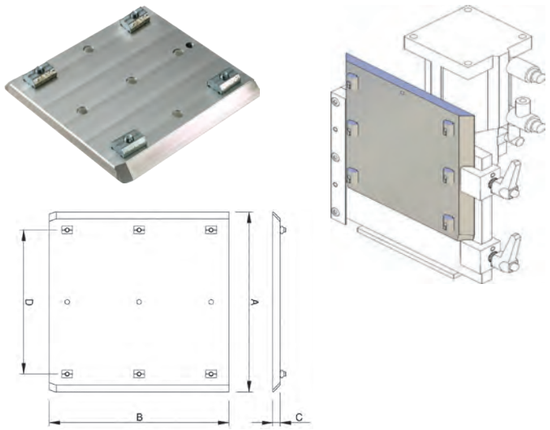

Part No.	A	B	C	D	Reference	Weight (g)
QC-SSW-60	60	60	8	35	QC-RSW-60-00	93
QC-SSW-100	100	100	8	70	QC-RSW-100-00	242
QC-SSW-160	160	160	10	120	QC-RSW-160-00	695
QC-SSW-250	250	250	10	200	QC-RSW-250-00	1641

Material: Aluminium.
Surface: Silver anodized.

QC-SSW-CP - EOAT Base Plate - Center Punched Holes

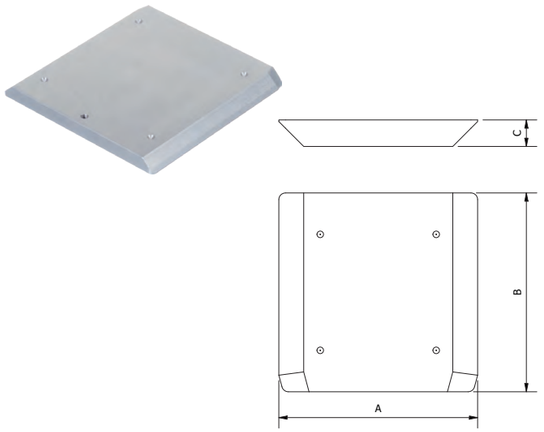

Part No.	A	B	C	Reference	Weight (g)
QC-SSW-060-CP	60	60	8	QC-RSW-60-00	69
QC-SSW-100-CP	100	100	8	QC-RSW-100-00	201
QC-SSW-160-CP	160	160	10	QC-RSW-160-00	653
QC-SSW-250-CP	250	250	10	QC-RSW-250-00	1613

Material: Aluminium.
Surface: Silver anodized.

QC.SWS – EOAT Base Plate Spring Loaded

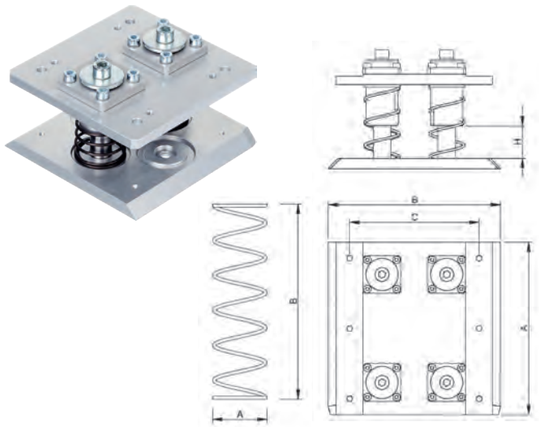

Part No.	A	B	C	H	F(N)	Guides	Weight (g)
QC-SWS-100	100	100	70	22	36	2	486
QC-SWS-160	160	160	120	30	50	4	1344

Compensates for variation in ejection stroke of IMM.

QC-SWR – EOAT Base Plate Reducer

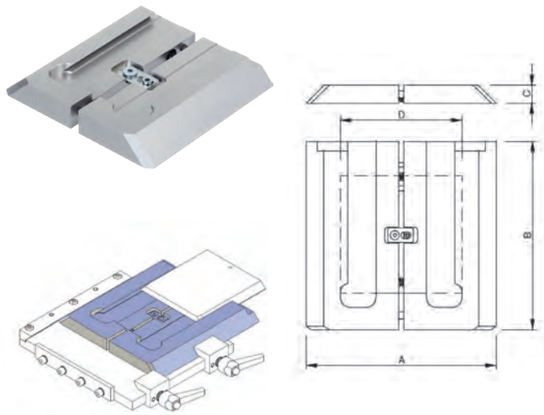

Part No.	A	B	C	D	REF 1	REF 2	Weight (g)
QC-SWR-100	100	100	15	60	QC-SSW-60	QC-RSW-100-00	263
QC-SWR-160	160	160	15	100	QC-SSW-100	QC-RSW-160-00	703
QC-SWR-250	250	250	20	160	QC-SSW-160	QC-RSW-250-00	2441

Allows mounting of EOAT's with smaller dovetail plates to a larger robot side plate.

QC-SWM – EOAT Wall Mount

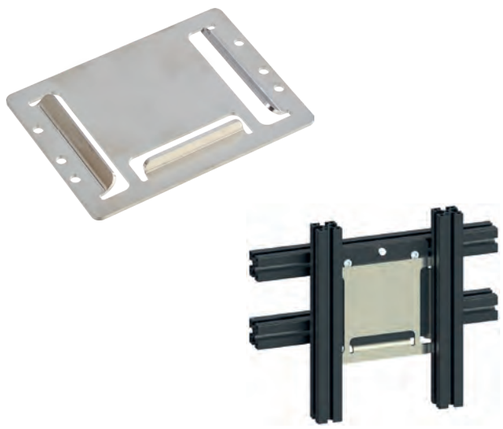

Part No.	REF	Weight (g)
QC-SWM-060	QC-SSW-60	136
QC-SWM-100	QC-SSW-100	238
QC-SWM-160	QC-SSW-160	547

For wall mounting of EOAT's with dovetail plates

QC-SWH – EOAT Wall Mount

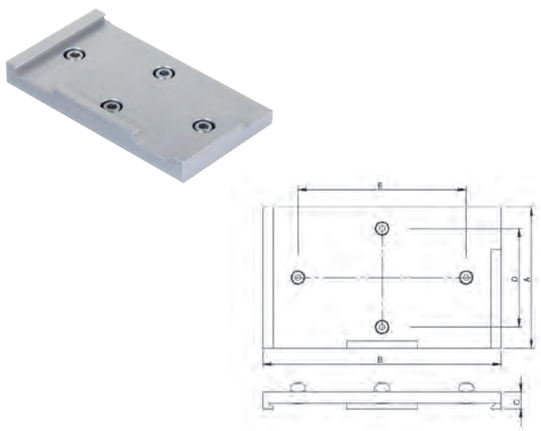

Part No.	A	B	C	D	E	REF	Weight (g)
QC-SWH-060	60	70	10	35	30	QC-SSW-60	128
QC-SWH-100	60	110	10	35	70	QC-SSW-100	182
QC-SWH-160	100	170	12	70	120	QC-SSW-160	412
QC-SWH-250	120	270	15	90	220	QC-SSW-250	1033

For wall mounted storage of EOAT's.

MRS – Quick Changer Robot Side

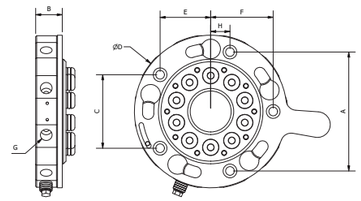

Part No.	D	A	C	E	F	H	G	B	Weight (g)
MRS-50	50	-	-	-	-	-	M5 (4x)	18,68	108
MRS-90	90	-	53,6	22,5	35	-	G 1/8 (8x)	18,3	318
MRS-150	150	116,03	71,7	49,35	61	18,85	G 1/4 (10x)	25,95	1158
MRS-160	160	116,03	71,7	49,35	61	18,85	G 1/8 (12X)	25,95	1213
MRS-200	200	175	87,5	75,8	75,8	25	G 1/4(12X)	30,6	2409

Quick changer for easy placement and correct alignment of EOAT on the robot.
Avoids mistakes in pneumatic/elecrical connections.
Available with 4, 8, 10 or 12 pneumatic ports.

MGS – Quick Changer Gripper Side

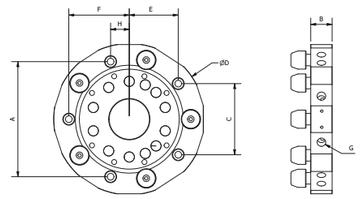

Part No.	D	A	C	E	F	H	G	B	Weight (g)
MGS-50	50	-	-	-	-	-	M5 (4x)	15,3	63
MGS-90	90	-	-	-	-	-	G 1/8 (8x)	15,9	227
MGS-150	150	114,13	70,53	48,54	60	18,54	G 1/4 (10x)	21,2	827
MGS-160	160	114,13	70,53	48,54	60	18,54	G 1/8 (12X)	21,2	900
MGS-200	200	175	87,5	75,8	75,8	25	G 1/4(12X)	25	1798

Quick changer for easy placement and correct alignment of EOAT on the robot.
Avoids mistakes in pneumatic/elecrical connections.
Available with 4, 8, 10 or 12 pneumatic ports.

MGSI – Interface for Quick Changer

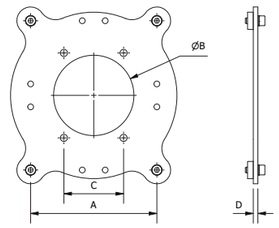

Part No.	A	B	C	D	Reference	Weight (g)
MGSI-50	25	32	15	3	MGS-50	63
MGSI-90	76	37	35	3	MGS-90	170
MGSI-150	110	70	52	4	MGS-150/MGS-160	497
MGSI-200	192	140	151,6	8	MGS-200	1439

Interface to mount EOAT quick changers to profiles.
Fastening set included.

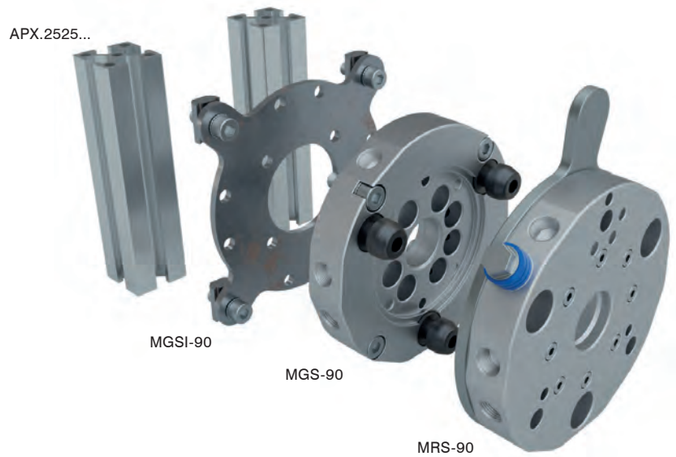

Dovetail Quick Changers	p. 157	Round Quick Changers	p. 159	Wall Mounts – Round	p. 161
EOAT Base Plates	p. 157	Quick Changer Interfaces	p. 159	Locating Pin	p. 161
Wall Mounts – Dovetail	p. 158	**Electrical Connectors**	**p. 160**		

QC.M.E – Electrical Connectors

Part No.	I/O connection type	Working Current	Break down voltage	Temperature range	Contact	Max conductor cross section	Max cable outer dia	Weight (g)
QC.MR.ES	15 pin	0,5	0 ÷ 250 Vac	-55°C, +105°C	Gold plated	AWG28	7 mm	50
QC.MG.ES	15 pin	0,5	0 ÷ 250 Vac	-55°C, +105°C	Gold plated	AWG28	7 mm	50
QC.MR.E	15 pin	3A	0 ÷ 250 Vac	-55°C, +105°C	Gold plated	AWG28	7 mm	50
QC.MG.E	15 pin	3A	0 ÷ 250 Vac	-55°C, +105°C	Gold plated	AWG28	7 mm	50

Springs assist in maintaining connections.
Spring contact design, minimises potential contact damage.
Self-aligning.

QC.MB - Electrical Connector Spacer for MRS-50/MGS-50

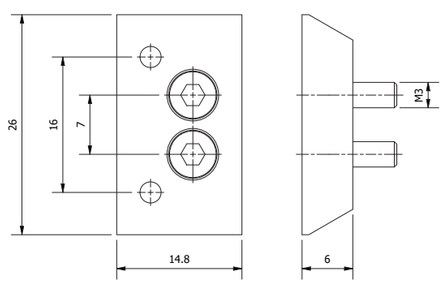

Part No.	Weight (g)
QC.MB.S	6

For wall mounted storage of EOAT's.

Dovetail Quick Changers	p. 157	Round Quick Changers	p. 159	**Wall Mounts – Round**	**p. 161**
EOAT Base Plates	p. 157	Quick Changer Interfaces	p. 159	**Locating Pin**	**p. 161**
Wall Mounts – Dovetail	p. 158	Electrical Connectors	p. 160		

MGSH – Wall Mount for Quick Changer

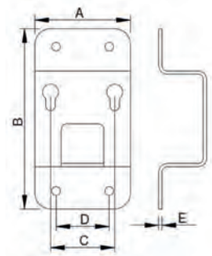

Part No.	A	REF	Weight (g)
MGSH-050	50	MGS-50	125
MGSH-090	90	MGS-90	440
MGSH-150	150	MGS-150/160	926
MGSH-200	200	MGS-200	1178

Included mounting screws.

QC-P – Locating Pin

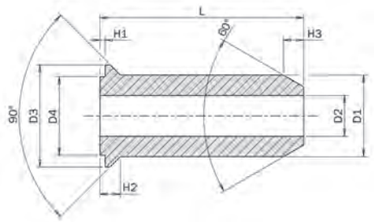

Part No.	L	H1	H2	H3	ØD1	ØD2	ØD3	ØD4	REF	Weight (g)
QC-P090065	65	2	5	5	18	8	20	14	MRS-90	190
QC-P150100	100	2,5	10	10	40	20	50	38,5	MRS-150	435
QC-P200120	120	3	11	15	50	25	60	43,5	MRS-200	950

To be positioned on the robot side.
It helps the manual centering of heavy EOATs.

163 Aluminum Profiles

164 Channel Nuts

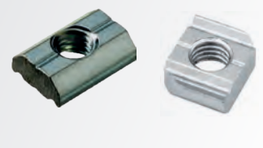

165 Profile Accessories

Aluminum Profiles p. 163
Channel Nuts p. 164
Profile Accessories p. 165

AP - Aluminum Profile

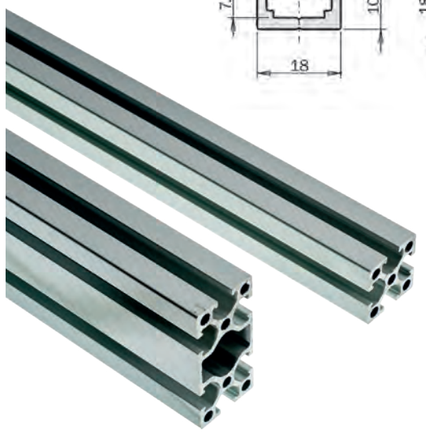

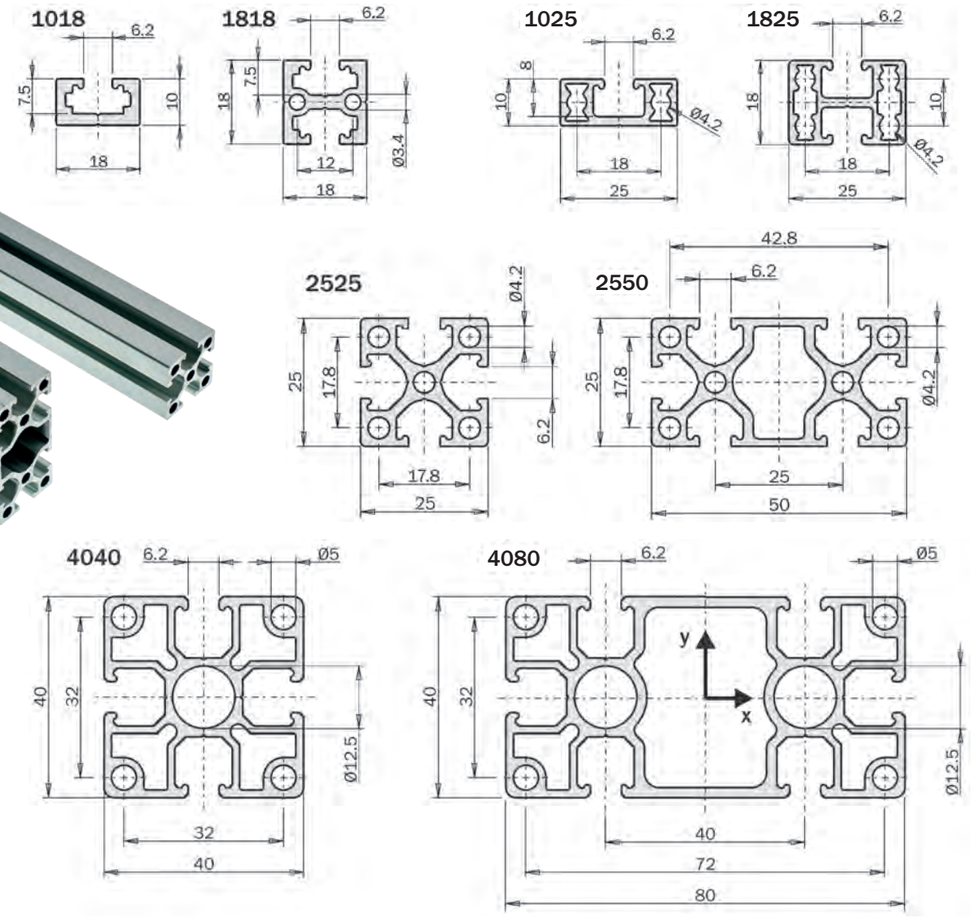

Part No.	Length	REF	Weight (g)
APL.1810.1000	1m	MPP-18-10	250
APL.1818.1000	1m	MPP-18-18	400
APX.2510.1000	1m	MPP-25-10	280
APX.2518.1000	1m	MPP-25-18	400
APX.2525.1000	1m	MPP-25-25	683
APX.2525.2000	2m	MPP-25-25	1365
APX.2550.1000	1m	MPP-25-50	1155
APX.2550.2000	2m	MPP-25-50	2311
APJ.4040.1000	1m	MPP-40-40	1407
APJ.4040.2000	2m	MPP-40-40	2814
APJ.4080.1000	1m	MPP-40-80	2302
APJ.4080.2000	2m	MPP-40-80	4603

Material: Aluminium.
Surface: Silver anodized.

Aluminum Profiles p. 163
Channel Nuts p. 164
Profile Accessories p. 165

MPP – Profile End Cap

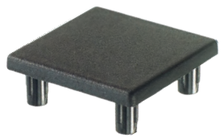

Part No.	A	B		Weight (g)
MPP-18-10	10	18	10	1
MPP-18-18	18	18	10	2
MPP-25-10	10	25	10	2
MPP-25-18	18	25	10	2
MPP-25-25	25	25	10	3
MPP-25-50	25	50	10	4
MPP-40-40	40	40	10	7
MPP-40-80	40	80	10	13

Provides a finished look to an EOAT.
Reduces the risk of injury by coverage of sharp edges.

CN – Channel Nut for Profiles

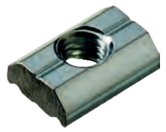

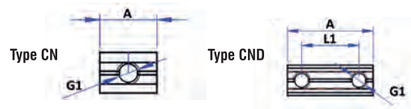

Part No.	G1	A	L1	Weight (g)
CN-M3	M3	15		6
CN-M4	M4	15		6
CN-M4-16	M4	24	16	9
CN-M5	M5	15		5
CN-M5-20	M5	30	20	11
CN-M6	M6	15		5
CN-M6-20	M6	30	20	11

Suitable for L, X and J line of profiles.

CN – Last Minute Channel Nut for Profiles

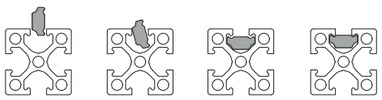

Part No.	A	Weight (g)
CN-M4-LM	M4	3
CN-M5-LM	M5	2
CN-M6-LM	M6	2

Suitable for L, X and J line of profiles.

MPH – EOAT Handle

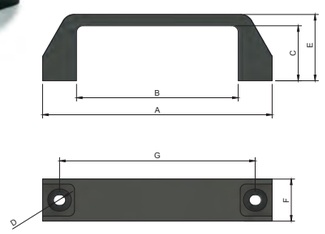

Part No.	A	B	C	D	E	F	G	Weight (g)
MPH.142	142	100	34	6,5	41	26	120	70

Includes mounting screws.

Aluminum Profiles p. 163
Channel Nuts p. 164
Profile Accessories p. 165

CTK - Cable Tie Block

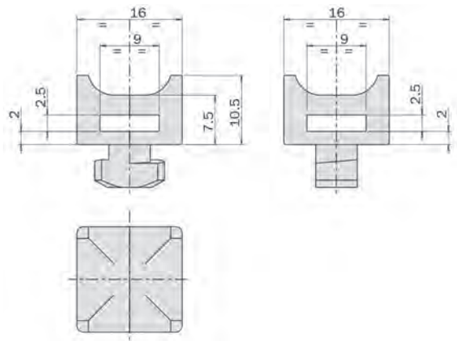

Part No.		Weight (g)
CTK.01X	10	20g

Twist on cable saddle for clean pneumatic/electrical cable management.

06. Profile Connectors

Corner Brackets	**p. 167**	End Connectors	p. 170
Cross Joint Connectors	p. 168	S, L, T Flat Connectors	p. 171
Square Joint Connectors	p. 169	Adjustable Connectors	p. 172

167 Corner Brackets

168 Cross Joint Connectors

169 Square Joint Connectors

170 End Connectors

171 S, L, T Flat Connectors

172 Adjustable Connectors

MP.WIV – Profile Corner Bracket

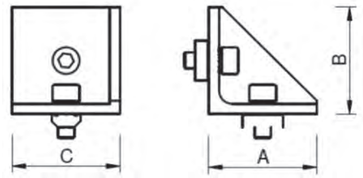

Part No.	A	B	C	REF	Weight (g)
MP.WIV.X.25.0	25	25	16	X	28
MP.WIV.X.50.25	51	51	16	X	80
MP.WIV.X.25	25	25	19	X	33
MP.WIV.X.50	50	50	19	X	82
MP.WIV.J.40	40	40	40	J	60
MP.WIV.J.80	78	78	37	J	184

Reinforcement of profile joints.

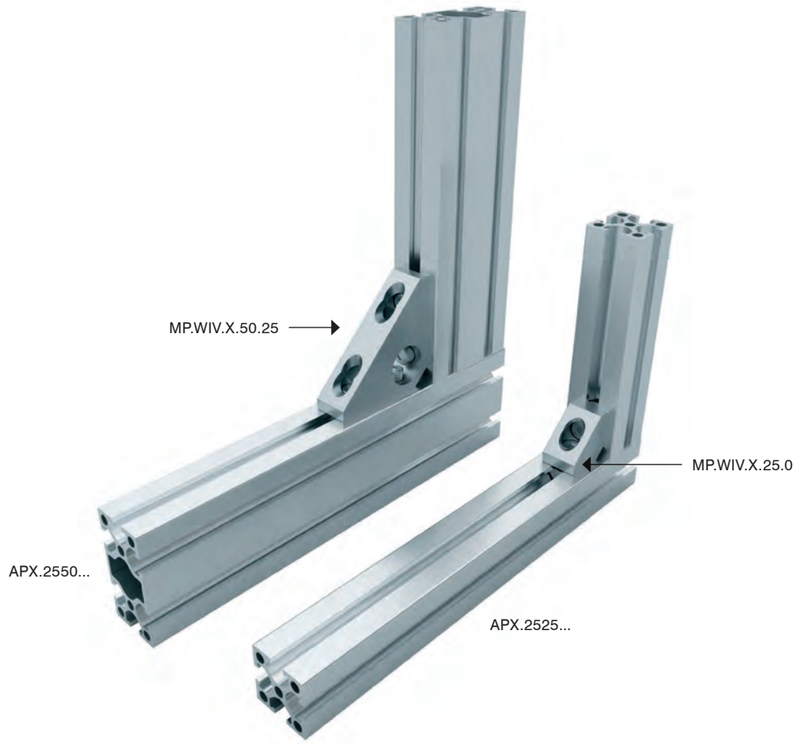

Corner Brackets p. 167
Cross Joint Connectors p. 168
Square Joint Connectors p. 169
End Connectors p. 170
S, L, T Flat Connectors p. 171
Adjustable Connectors p. 172

CC – Profile Cross Joint Connector

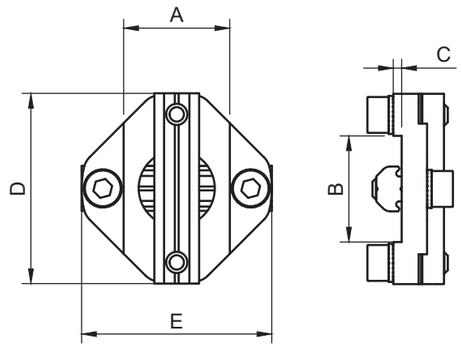

Part No.	A	B	C	D	E	REF	Weight (g)
CC18-18-L	18	18	38	38	3	L	40
CC25-18-X	25	18	45	45	4	X	60
CC25-25-X	25	25	45	45	4	X	67
CC50-25-X	50	25	45	70	4	X	76
CC50-50-X	50	50	70	70	4	X	192
CC40-25-J	40	25	45	60	4	X/J	77
CC40-40-J	40	40	65	65	4	J	81
CC80-40-J	80	40	100	60	4	J	156
CC80-80-J	80	80	100	100	4	J	268

Exact 90° connection of two profiles.
Highly rigid, connection.
Allows adjustment of both profiles.

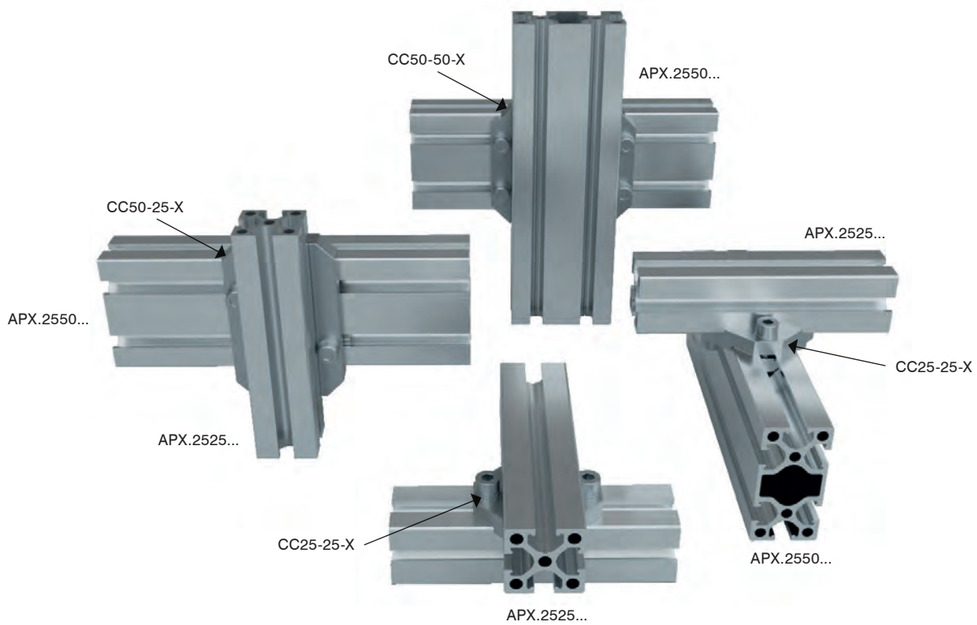

Corner Brackets p. 167
Cross Joint Connectors p. 168
Square Joint Connectors p. 169
End Connectors p. 170
S, L, T Flat Connectors p. 171
Adjustable Connectors p. 172

CCB - Square Joint Connectors

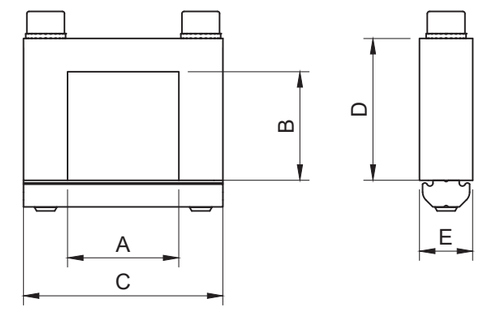

Part No.	A	B	C	D	E	REF	Weight (g)
CBB18-18-L	18	18	32	24,5	10	L	22
CCB25-25-X	25	25	45	30	15	X	40
CCB25-50-X	25	50	70	30	15	X	54
CCB50-25-X	50	25	45	55	15	X	57
CCB40-40-J	40	40	60	48,5	15	J	72
CCB80-40-J	80	40	100	50	15	J	107

For 90° connection of two profiles.
Allows adjustment of both profiles.

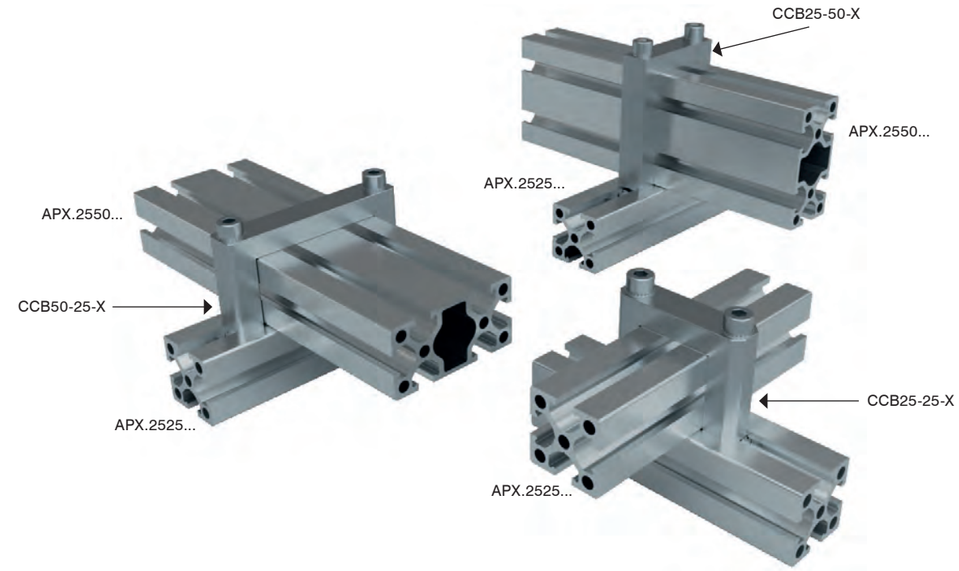

Corner Brackets p. 167
Cross Joint Connectors p. 168
Square Joint Connectors p. 169
End Connectors p. 170
S, L, T Flat Connectors p. 171
Adjustable Connectors p. 172

EP. – Profile End Plate

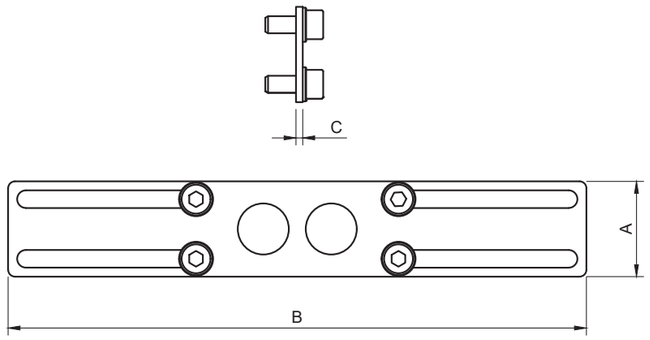

Part No.	A	B	C	Reference	Weight (g)
EP.25.170	25	170	2	APX25-25..	48
EP.25.220	25	220	2	APX25-25..	60
EP.25.270	25	270	2	APX25-25..	69
EP.25.320	25	320	2	APX25-25..	85
EP.50.25.170	50	170	2	APX25-50..	100
EP.50.25.220	50	220	2	APX25-50..	130
EP.50.25.270	50	270	2	APX25-50..	162
EP.50.25.320	50	320	2	APX25-50..	192

End plate connection for added rigidity of framwork.

PE. – Profile End Connector

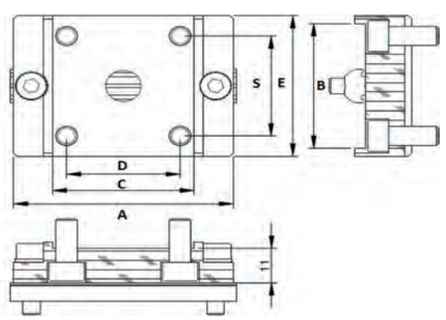

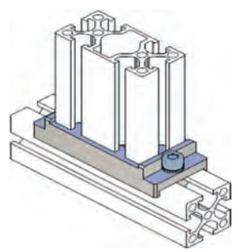

Part No.	A	B	C	D	S	E	REF	Weight (g)
PE.25.25	50	25	25	17,5	17,5	30	APX.2525	69
PE.25.50	70	25	50	42,5	17,5	30	APX.2550	87
PED.25.50	55	50	-	14,5	17,5	25	APX.2525/APX.2550	69
PED.50.50	75	55	-	42,5	17,5	25	APX.2550/APX.2550	87
PE.40.40	62	40	40	32	32	45	APX.4040	128

Strong 90° connection of two profiles.
End connected profile, adjustable along length of other profile.
End of profile needs to be tapped.

Corner Brackets p. 167
Cross Joint Connectors p. 168
Square Joint Connectors p. 169
End Connectors p. 170
S, L, T Flat Connectors p. 171
Adjustable Connectors p. 172

MA.VBG. – Profile Connector Straight

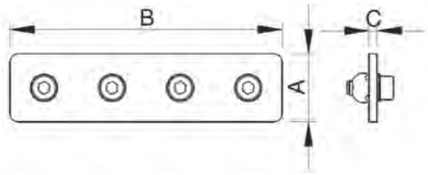

Part No.	A	B	C	REF	Weight (g)
MA.VBG.X.25.50	25	50	3	X	47
MA.VBG.X.50.50	50	50	3	X	94
MA.VBG.X.25.100	25	100	3	X	99
MA.VBG.J.40.80	40	80	3	J	97
MA.VBG.J.40.160	40	10	3	J	215

Material: Steel

MA.VBL. – Profile Connector L-Style

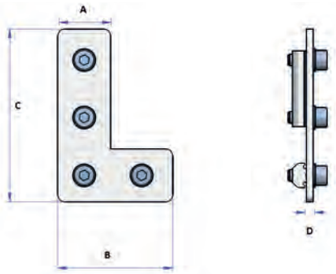

Part No.	A	B	C	D	REF	Weight (g)
MA.VBL.50.50	23	50	50	3	X	71
MA.VBL.50.75	23	50	75	3	X	96
MA.VBL.80.80	40	80	80	3	J	147
MA.VBL.80.120	40	80	120	3	J	200

Material: Steel

MA.VBT. – Profile Connector T-Style

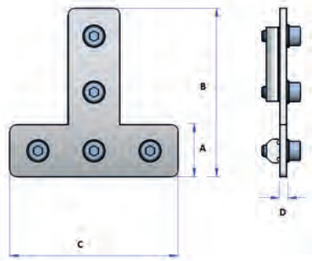

Part No.	A	B	C	D	REF	Weight (g)
MA.VBT.50.75	25	75	75	3	X	123
MA.VBT.75.100	25	75	100	3	X	149
MA.VBT.120.80	40	120	80	3	J	264

Material: Steel.

Corner Brackets	p. 167	End Connectors	p. 170
Cross Joint Connectors	p. 168	S, L, T Flat Connectors	p. 171
Square Joint Connectors	p. 169	**Adjustable Connectors**	**p. 172**

MP.EVB. – Corner Joint Plate

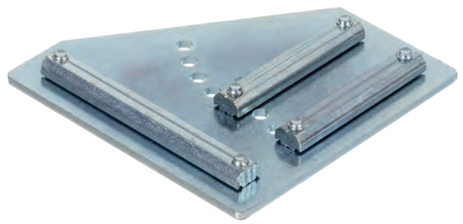

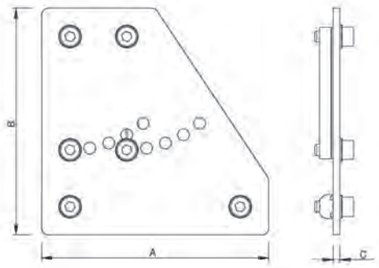

Part No.	A	B	C	REF	Weight (g)
MP.EVB.100.X	100	100	3	X	292
MP.EVB.100.J	80	100	3	J	206

Material: Steel.

MP.VBW. – Adjustable Profile Connector 0-90°

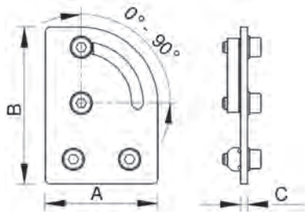

Part No.	A	B	C	Weight (g)
MP.VBW.X.0.90	50	70	3	112
MP.VBW.J.0.90	80	120	3	249

Material: Steel.

MP.VBW. – Profile Connector 45°

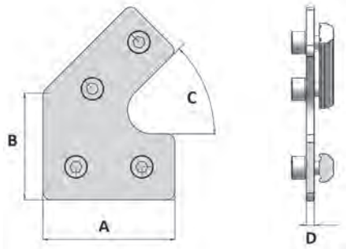

Part No.	A	B	C	D	REF	Weight (g)
MP.VBW.X.45	50	77	45°	3	X	104
MP.VBW.J.45	130	147	45°	3	J	372

Material: Steel.

Corner Brackets	p. 167	End Connectors	p. 170
Cross Joint Connectors	p. 168	S, L, T Flat Connectors	p. 171
Square Joint Connectors	p. 169	Adjustable Connectors	p. 172

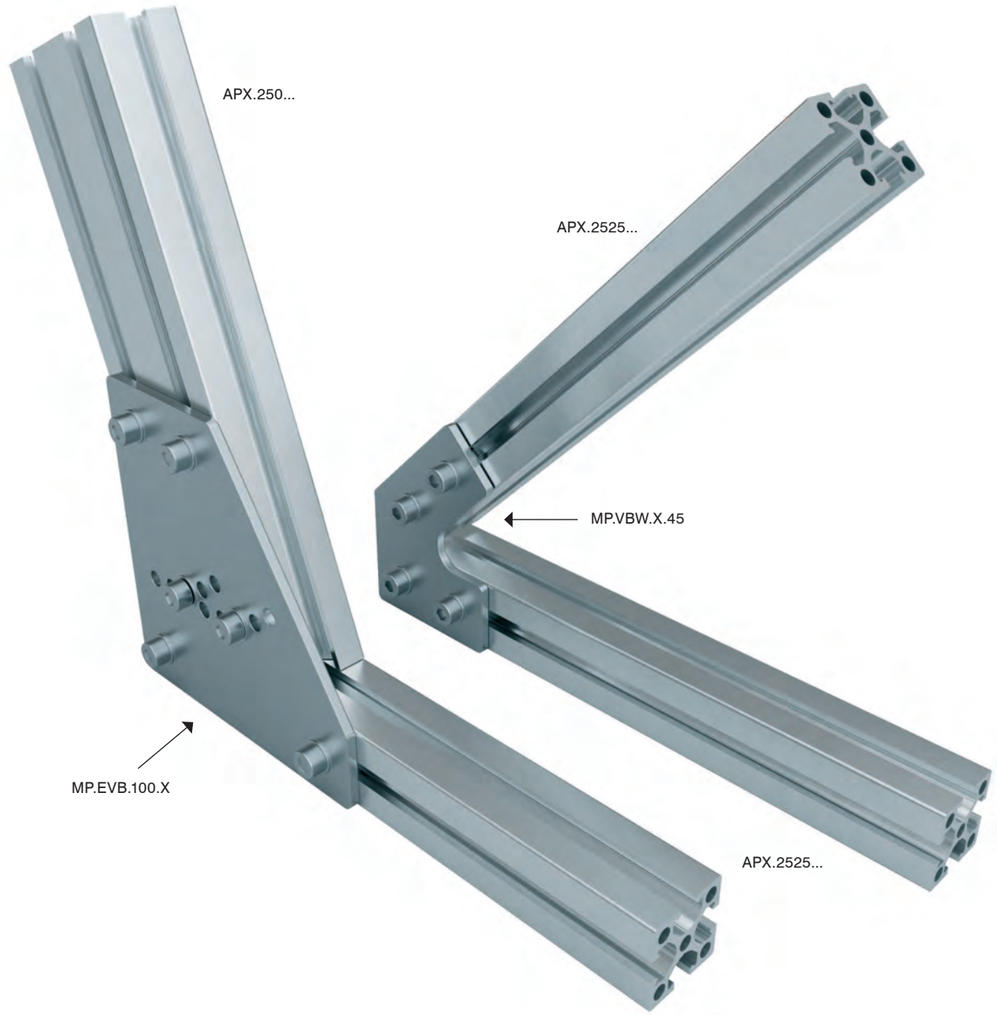

175 Cross Clamps

175 Angle Clamps

178 Mounting Brackets

179 Cross Tube Connectors

Cross Clamps	**p. 175**	Mounting Brackets	p. 178
Angle Clamps	**p. 175**	Cross Tube Connectors	p. 179

CCR. – Cross Connector - Round

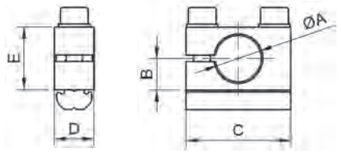

Part No.	A	B	C	D	E	Weight (g)
CCR.10.X	10	7	25	10	14	22
CCR.14.X	14	9,5	32	12	19	36
CCR.20.X	20	14	40	15	28	58
CCR.20.J	20	14	40	20	28	75
CCR.30.J	30	18	50	20	36	97

Connects tubular components to profiles at 90°.
Adjustment of componets witout lose of clamp position.

CCR.B – Cross Connector - Round With Ball Joint

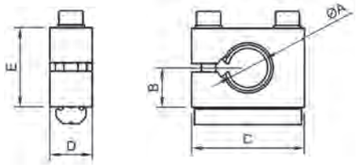

Part No.	A	B	C	D	E	Weight (g)
CCRB.10.X	10	12	35	12	24	51
CCRB.14.X	14	14	40	15	28	68
CCRB.20.X	20	18	50	20	36	135
CCRB.20.J	20	18	55	20	36	156

Flexibilty of positioning of components.
Adjustment of componets witout lose of clamp position.

ACH. – Angle Clamp - Heavy Duty

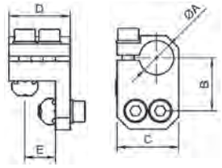

Part No.	A	B	C	D	E	Weight (g)
ACH.10.L	10	16	20	20	18	25
ACH.10.X	10	19,5	25	25	12,5	50
ACH.14.X	14	21,5	25	25	12,5	51
ACH.20.X	20	24,5	32	30	12,5	77
ACH.20.J	20	33	35	40	20	105
ACH.30.J	30	39	45	45	20	162

Heavy duty clamp.
Minimises deflection due to wrap around connection.

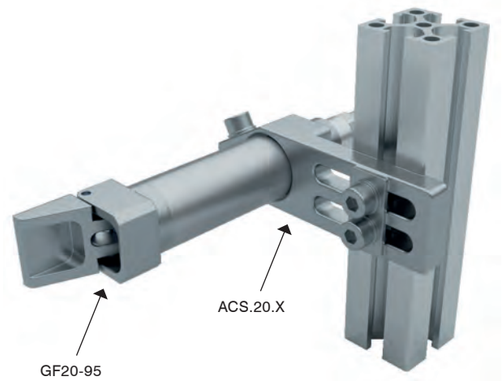

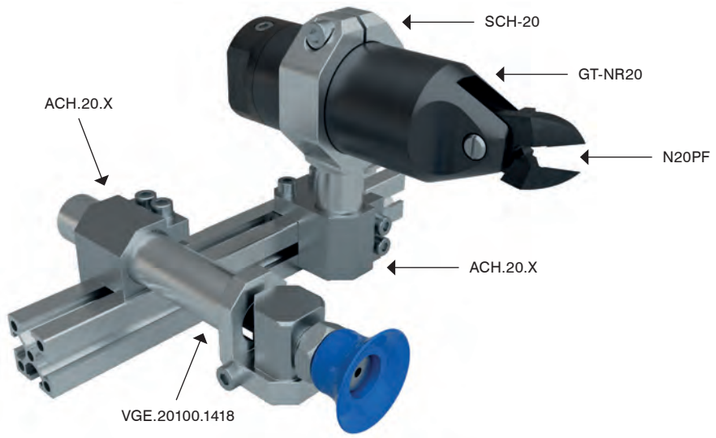

ACS. – Short Angle Clamp

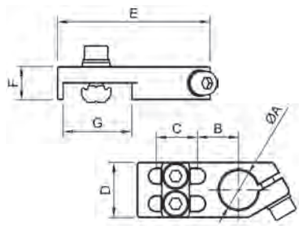

Part No.	A	B	C	D	E	F	G	Weight (g)
ACS.10.L	10	12,2	9	16	42	8	18	21
ACS.10.X	10	12,2	15	16	49	8	25	22
ACS.14.X	14	15	15	20	55	12	25	37
ACS.20.X	20	18	15	25	63	15	25	50
ACS.20.J	20	18	30	25	78	15	40	54
ACS.30.X	30	23,5	15	35	75,5	20	25	82
ACS.30.J	30	23,5	29	35	90,5	20	40	92

Material: Aluminium.
ACS clamps allow for mounting flexibility.
Kit with screws.t

ACM. – Medium Angle Clamp

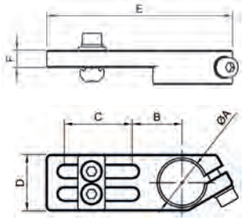

Part No.	A	B	C	D	E	F	Weight (g)
ACM.1020.L	10	16,5	20	16	56	4	23
ACM.1425.X	14	19	25	20	70	6	36
ACM.2035.X	20	22	35	25	82	7,5	55
ACM.3035.X	30	28,5	35	35	96	10	94

Material: Aluminium.
ACM clamps allow for mounting flexibility.
Kit with screws.

ACL. – Long Angle Clamp - Universal

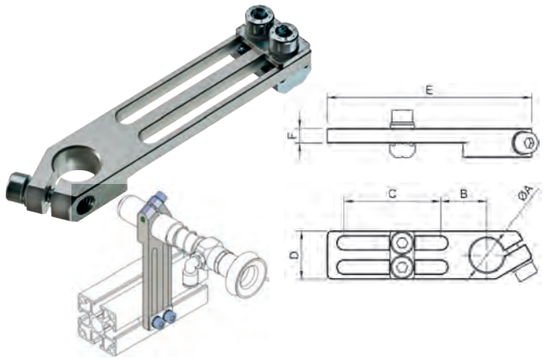

Part No.	A	B	C	D	E	F	Weight (g)
ACL.1040.L	10	16,5	40	16	76	4	24
ACL.1040.X	10	16,5	40	16	76	4	24
ACL.1440.X	14	19	40	20	85	6	39
ACL.1450.X	14	19	50	20	95	6	42
ACL.2060.X	20	22	60	25	112	7,5	62
ACL.2070.J	20	22	70	28	123	7,5	77
ACL.3060.X	30	28,5	60	35	126	10	113
ACL.3070.J	30	28,5	70	35	136	10	130

Material: Aluminium.
ACL clamps allow for mounting flexibility.
Kit with screws.

ACLH. – Long Angle Clamp - Heavy Duty

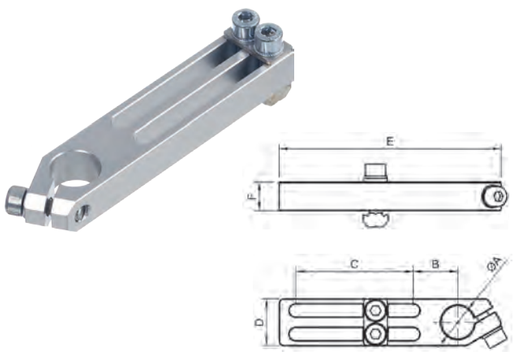

Part No.	A	B	C	D	E	F	Weight (g)
ACLH.1040.X	10	16,5	40	16	76	8	30
ACLH.1450.X	14	19	50	20	95	12	57
ACLH.2060.X	20	22	60	25	112	15	90
ACLH.2070.X	20	22	70	28	123	15	112
ACLH.3070.J	30	28,5	70	35	136	20	185

Material: Aluminium.
ACLH Heavy duty clamps allow for mounting flexibility with higher loads.
Kit with screws.

End of Arm Tooling | Clamps *Angle Clamps*

Cross Clamps p. 175
Angle Clamps p. 175
Mounting Brackets p. 178
Cross Tube Connectors p. 179

ACMB- – Medium Angle Clamp - with Ball Joint

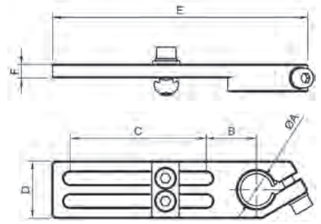

Part No.	A	B	C	D	E	F	Weight (g)
ACMB.1020.L	10	19	20	20	65	6	52
ACMB.1425.X	14	22	35	25	87	6	60
ACMB.2035.X	20	28,5	35	35	102	10	150

Material: Aluminium
ACMB clamps feature an integrated ball joint for rotational adjustemnt.
Kit with Screws

ACLB. – Long Angle Clamp with Ball Joint

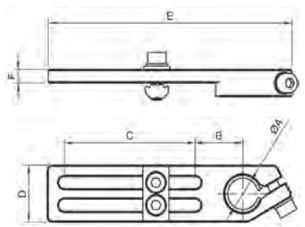

Part No.	A	B	C	D	E	F	Weight (g)
ACLB.1050.X	10	19	50	20	95	6	56
ACLB.1460.X	14	22	60	25	112	6	66
ACLB.2060.X	20	28,5	60	35	127	10	166

Material: Aluminium.
ACLB clamps feature an integrated ball joint for rotational adjustment.
Kit with screws.

ACLS. – Long Angle Clamp - Swivel Head

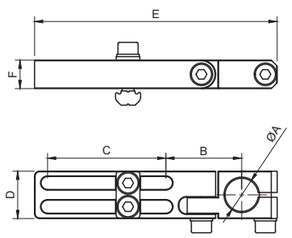

Part No.	A	B	C	D	E	F	Weight (g)
ACLS.1040.X	10	27,5	40	20	86	10	55
ACLS.1450.X	14	32	50	20	102,5	12	67
ACLS.2060.X	20	37,5	60	25	124,5	15	115
ACLS.3080.X	30	50	80	35	166,5	20	254

Material: Aluminium.
Increased flexibility in component positioning.
Heavy duty design ensures component stability.

ACLSB. – Long Angle Clamp - Swivel Head and Ball Joint

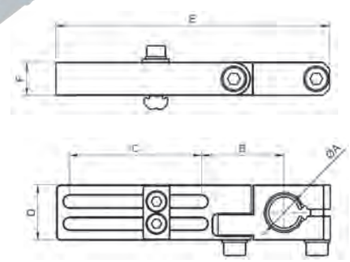

Part No.	A	B	C	D	E	F	Weight (g)
ACLSB.1050.X	10	32	50	20	102,5	12	74
ACLSB.1460.X	14	37,5	60	25	124,5	15	126
ACLSB.2080.X	20	50	80	35	166,5	20	304

Maximum flexibility in component positioning.
Heavy duty design ensures component stability.

MB.04. – Mounting Bracket

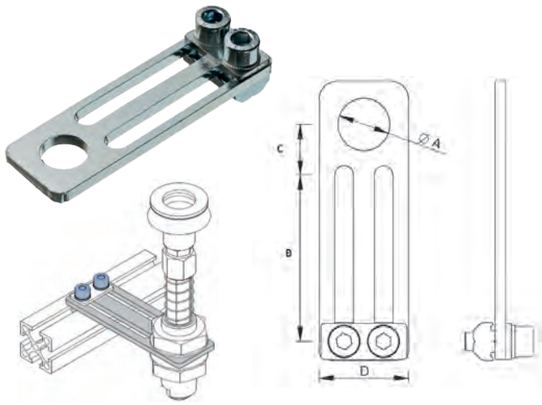

Part No.	A	B	C	D	Weight (g)
MB.04.20.10.X	10	40	11	20	35 g
MB.04.20.14.X	14	46	14	25	45 g

Material: Aluminum.
Surface: Silver anodized.

MBS. – Slotted Mounting Bracket

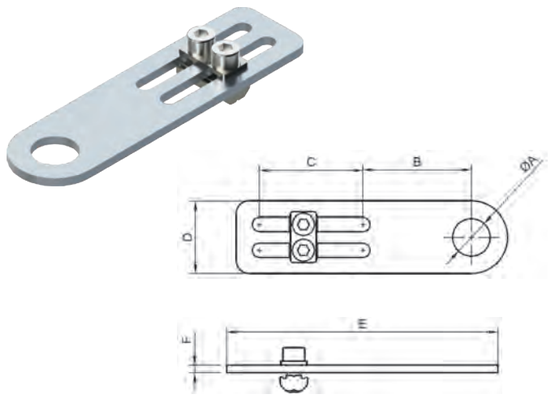

Part No.	A	B	C	D	E	F	Weight (g)
MBS.1040.X	10,5	42	40	28	105	3	69
MBS.1240.X	12,5	42	40	28	105	3	69
MBS.1440.X	14,5	42	40	28	105	3	68
MBS.1640.X	16,5	42	40	28	105	3	67
MBS.2040.X	20,5	42	40	28	105	3	65

Material: Steel.
Economy mounting of threaded suspensions.

MBT. – Threaded Mounting Bracket

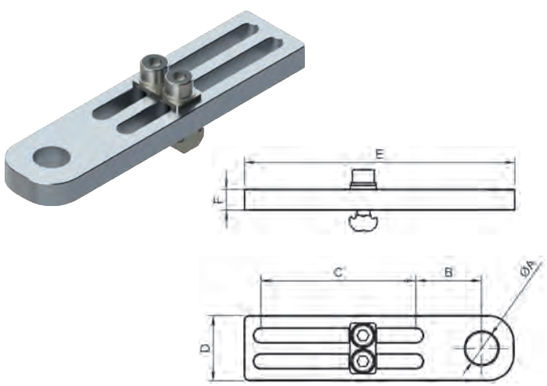

Part No.	A	B	C	D	E	F	Weight (g)
MBT.G840.X	G1/8	18,5	40	20	75	8	40
MBT.1040.X	M10x1	18,5	40	25	75	8	40
MBT.1260.X	M12x1	25,5	60	25	104,5	8	57
MBT.1460.X	M14x1.5	25,5	60	25	104,5	8	56
MBT.1660.X	M16x1	25,5	60	25	104,5	8	55
MBT.2060.X	M20x1.5	25,5	60	25	104,5	8	55
MBT.2560.X	M25x1.5	33,5	60	30	104,5	8	71
MBTS.60.X	Solid	25,5	60	25	104,5	8	59

Material: Aluminium.
Simplified mounting of threaded suspensions.
Kit with screws.

MPW. – Clamp Extension Arm

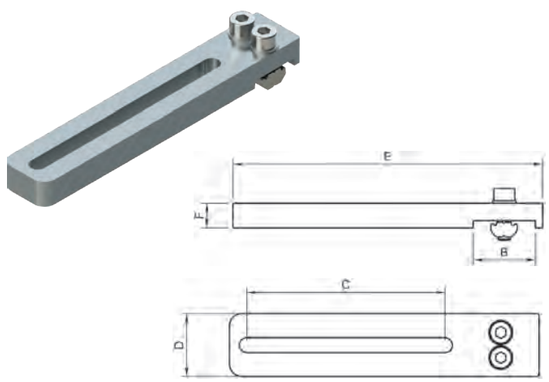

Part No.	A	B	C	D	E	F	Weight (g)
MPW.1818.X		18	80	20	118	10	62
MPW.2580.X		25	80	25	125	10	81
MPW.4080.X		40	80	25	140	10	88

Material: Aluminium
MPW extension arms allow for greater flexibilty in the mounting of clamps.
Reduces the amount of hardware required, saving weight and cost.
Kit with screws

CCT. – Cross Tube Connector

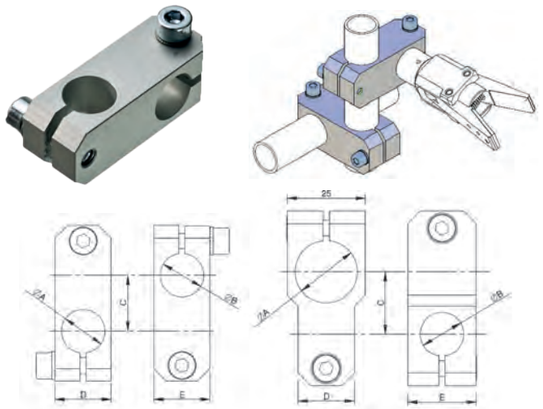

Part No.	A	B	C	D	E	Weight (g)
CCT.10.10	10	10	16	14	14	17
CCT.14.14	14	14	18	18	18	35
CCT.20.20	20	20	26	25	25	71
CCT.20.10	20	10	20	14	20	41
CCT.20.14	20	14	20	18	22	48

90° Connection of two components with one clamp.

CA. – Parallel Tube Connector

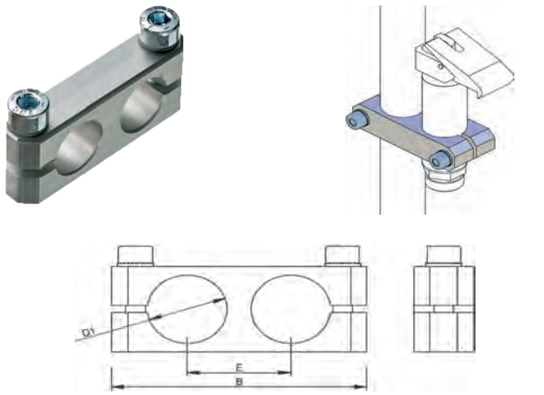

Part No.	D1	B	E	Weight (g)
CA.1010.15	10	38	15	12
CA.1414.20	14	52	20	27
CA.2020.26	20	64	26	47
CA.3030.38	30	88	38	104

Parallel connection of two components with one clamp.

RID. – Reducer

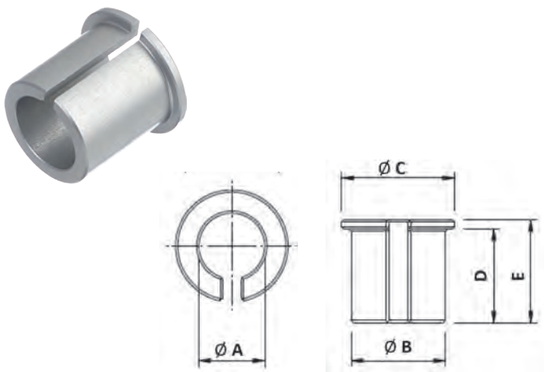

Part No.	A	B	C	D	E	Weight (g)
RID.1410	10	14	18	14	16	4
RID.2014	14	20	24	20	22	9
RID.3020	20	30	30	30	30	30

Enables the use of smaller diameter shafts in a larger clamp.

Heavy Duty Elbow Arms p. 181
Elbow Arms p. 181
Angle Arms p. 181
Centering Pin p. 182
Extension Tubes p. 182
Gripper Suspension – Swivel Head p. 182
Spring Loaded Elbow Arm – Swivel Head p. 182

181 Heavy Duty Elbow Arms

181 Elbow Arms

181 Angle Arms

182 Centering Pin

182 Extension Tubes

182 Gripper Suspension – Swivel Head

182 Spring Loaded Elbow Arm – Swivel Head

MA.GLH. – Gripper Elbow Arm Heavy Duty

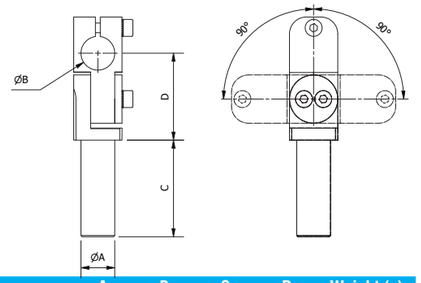

Part No.	A	B	C	D	Weight (g)
MA.GLH.1010.030	10	10	30	30	27
MA.GLH.1010.060	10	10	60	30	31
MA.GLH.1010.090	10	10	90	30	37
MA.GLH.1414.040	14	14	40	36	56
MA.GLH.1414.080	14	14	80	36	66
MA.GLH.1414.120	14	14	120	36	83
MA.GLH.2020.050	20	20	50	45,5	111
MA.GLH.2020.100	20	20	100	45,5	127
MA.GLH.2020.150	20	20	150	45,5	169
MA.GLH.3030.080	30	30	80	60	302
MA.GLH.3030.140	30	30	140	60	394
MA.GLH.3030.200	30	30	200	60	509

Secure clamping for high loads.

MA.GLA. – Gripper Elbow Arm

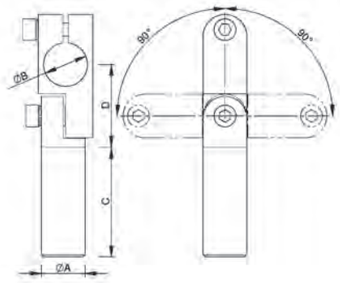

Part No.	A	B	C	D	Weight (g)
MA.GLA.1010.30	10	10	30	22	17
MA.GLA.1010.60	10	10	60	22	21
MA.GLA.1010.90	10	10	90	22	28
MA.GLA.1414.40	14	14	40	30	43
MA.GLA.1414.80	14	14	80	30	51
MA.GLA.1414.120	14	14	120	30	70
MA.GLA.2020.50	20	20	50	38	99
MA.GLA.2020.100	20	20	100	38	106
MA.GLA.2020.150	20	20	150	38	165
MA.GLA.2030.100	20	30	100	47	315
MA.GLA.3030.100	30	30	100	52,5	315

MA.WKA. – Angle Gripper Arm

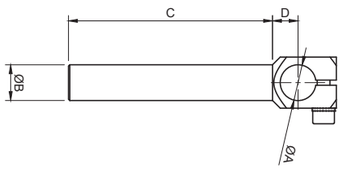

Part No.	A	B	C	D	Weight (g)
MA.WKA.1010.30	10	10	30	8	13
MA.WKA.1010.60	10	10	60	8	17
MA.WKA.1010.90	10	10	90	8	22
MA.WKA.1414.40	14	14	40	10	22
MA.WKA.1414.80	14	14	80	10	35
MA.WKA.1414.120	14	14	120	10	48
MA.WKA.2020.50	20	20	50	12	47
MA.WKA.2020.100	20	20	100	12	78
MA.WKA.2020.150	20	20	150	12	96
MA.WKA.3030.80	30	30	80	17	136
MA.WKA.3030.140	30	30	140	17	178
MA.WKA.3030.200	30	30	200	17	278

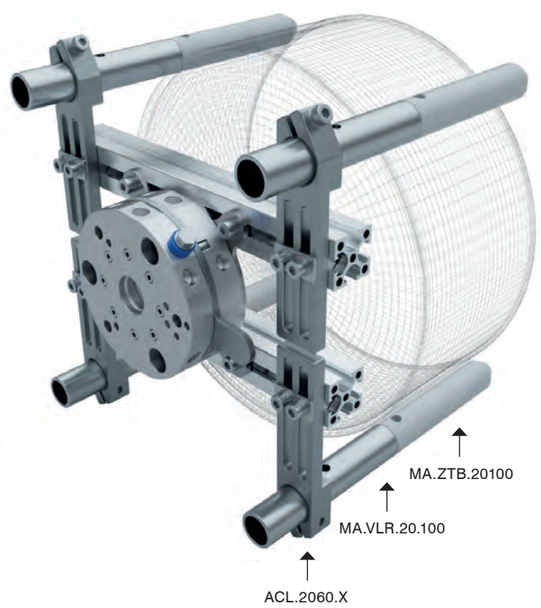

Heavy Duty Elbow Arms p. 181
Elbow Arms p. 181
Angle Arms p. 181
Centering Pin p. 182
Extension Tubes p. 182
Gripper Suspension – Swivel Head p. 182
Spring Loaded Elbow Arm – Swivel Head p. 182

SXPC. – Gripper Suspension Smooth Body (Non-rotative) Adjustable Clamp

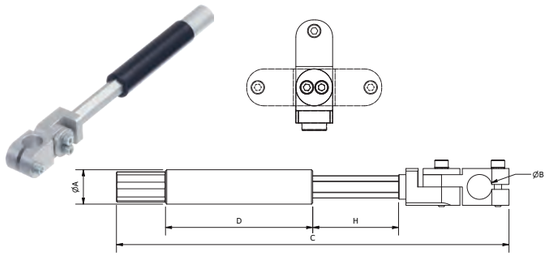

Part No.	A	B	C	D	H	F(N)	Weight (g)
SXPC.1420.10	14	10	128	42	20	8,9	43
SXPC.1435.10	14	10	160	60	35	9,5	50
SXPC.2025.14	20	14	153	55	25	11	95
SXPC.2025.20	20	20	166	55	25	11	111

Clamp angle adjustable between 0°and 90°.

SXPCT. – Gripper Suspension Threaded Body (Non-rotative) Adjustable Clamp

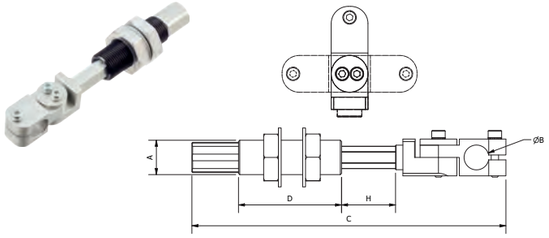

Part No.	A	B	C	D	H	F(N)	Weight (g)
SXPCT.1420.10	M14x1.5	10	128	42	20	8,9	55
SXPCT.2025.14	M20x1.5	14	153	55	25	11	130

Clamp angle adjustable between 0°and 90°.

SVPC. – Spring Loaded Elbow Arm Smooth Body (Non-rotative) Swivel Head

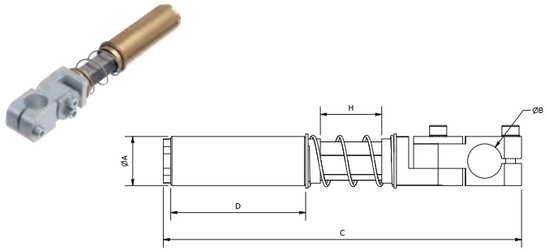

Part No.	A	B	C	D	H	Weight (g)
SVPC.1415.10	14	10	106	32	15	58
SVPC.2025.14	20	14	144	55	25	149
SVPC.2025.20	20	20	157	55	25	164

Clamp angle adjustable between 0°and 90°.

MA.VLR. – Extension Tube

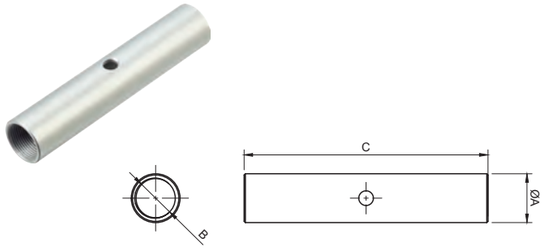

Part No.	A	B	C	Weight (g)
MA.VLR.10.30	10	M8x1	30	3
MA.VLR.10.60	10	M8x1	60	6
MA.VLR.10.90	10	M8x1	90	10
MA.VLR.14.40	14	M12x1	40	6
MA.VLR.14.80	14	M12x1	80	13
MA.VLR.14.120	14	M12x1	120	19
MA.VLR.20.050	20	M17x1	50	15
MA.VLR.20.100	20	M17x1	100	31
MA.VLR.20.150	20	M17x1	150	46
MA.VLR.30.80	30	M27x1	80	38
MA.VLR.30.140	30	M27x1	140	67

MA.ZTB. – Centering Pin

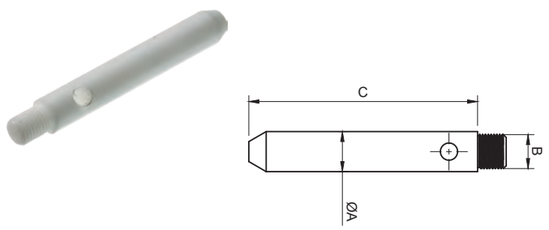

Part No.	A	B	C	REF	Weight (g)
MA.ZTB.1060	10	M8x1	60	MA.VLR.10	7
MA.ZTB.1480	14	M12x1	80	MA.VLR.14	18
MA.ZTB.20100	20	M17x1	100	MA.VLR.20	47
MA.ZTB.30100	30	M27x1	100	MA.VLR.30	104

End of Arm Tooling | Gripper Arms

Heavy Duty Elbow Arms p. 181
Elbow Arms p. 181
Angle Arms p. 181
Centering Pin p. 182
Extension Tubes p. 182
Gripper Suspension – Swivel Head p. 182
Spring Loaded Elbow Arm – Swivel Head p. 182

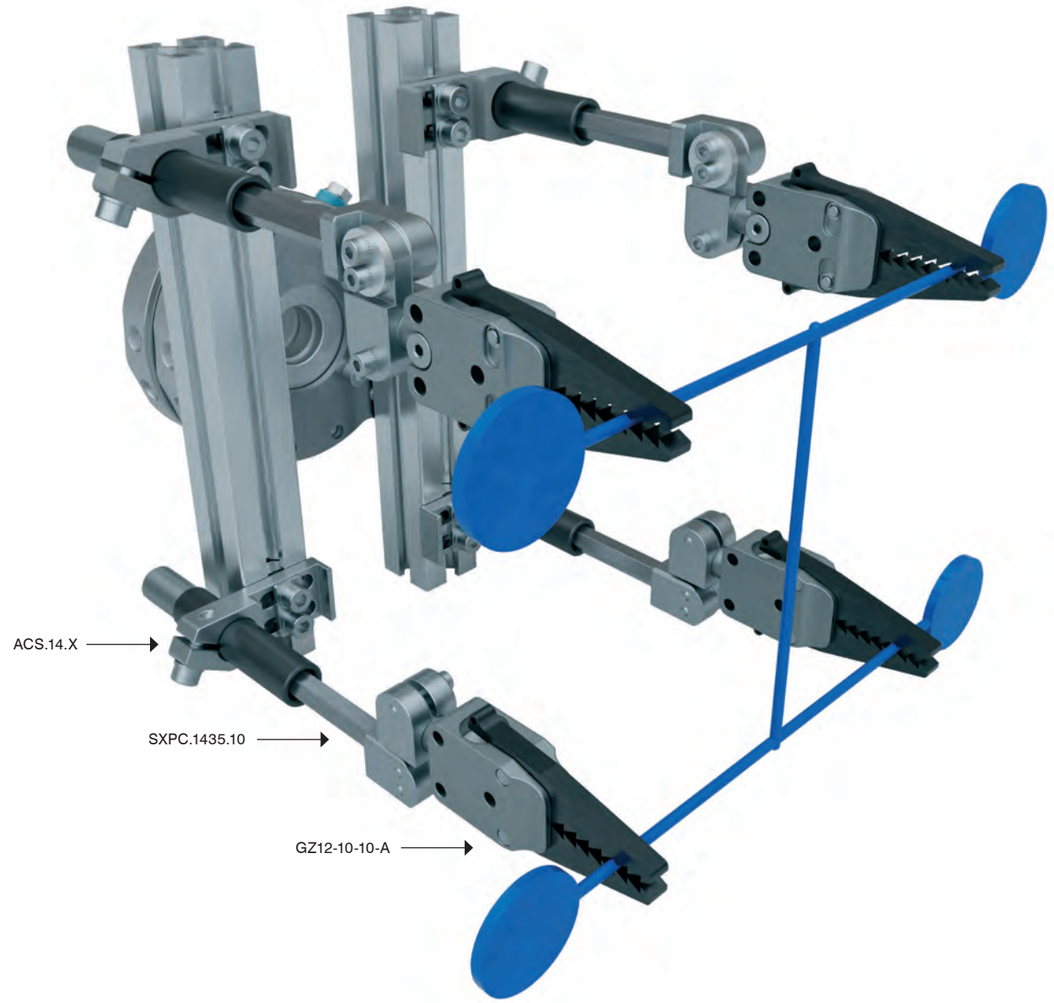

6
End of Arm Tooling (EOAT)

06. Vacuum Cup Mounts

185 Rigid Vacuum Cup Arms

186 Vacuum Cup Mounts

186 Vacuum Cup Mounts – Long

188 Suspensions – Smooth Body

190 Suspensions – Threaded Body

192 Suspensions – Swivel Head

Rigid Cup Arms	**p. 185**	Suspensions – Smooth Body	p. 188
Cup Mounts	p. 186	Suspensions – Threaded Body	p. 200
Cup Mounts – Long	p. 186	Suspensions – Swivel Head	p. 202

VGE. – Elbow Arm for Vacuum Cups

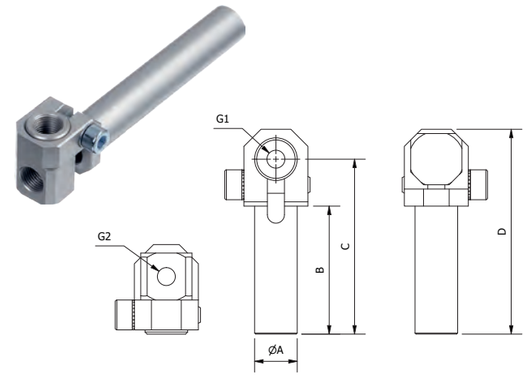

Part No.	A	B	C	D	G1	G2	Weight (g)
VGE.10030.0505	10	30	41	48	M5	M5	14
VGE.10060.0505	10	60	71	78	M5	M5	17
VGE.10090.0505	10	90	101	108	M5	M5	20
VGE.14040.1818	14	40	56	65	G 1/8	G 1/8	29
VGE.14080.1818	14	80	96	105	G 1/8	G 1/8	38
VGE.14120.1818	14	120	136	145	G 1/8	G 1/8	45
VGE.20050.1418	20	50	68	80	G 1/8	G 1/4	56
VGE.20100.1418	20	100	118	130	G 1/8	G 1/4	70
VGE.20150.1418	20	150	168	180	G 1/8	G 1/4	87
VGE.20050.1414	20	50	68	80	G 1/4	G 1/4	55
VGE.20100.1414	20	100	118	130	G 1/4	G 1/4	69
VGE.20150.1414	20	150	168	180	G 1/4	G 1/4	86

Allows optimal positioning of vacuum to part contour.
Angle adjustable between 0°and 90°.
Side vacuum port.

VGA. – Gripper Arm for Vacuum Cups

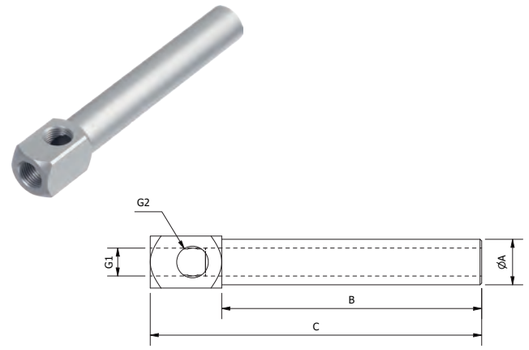

Part No.	A	B	C	G1	G2	Weight (g)
VGA.10030.0505	10	30	46	M5	M5	9
VGA.10060.0505	10	60	76	M5	M5	15
VGA.10090.0505	10	90	106	M5	M5	24
VGA.10030.1805	10	30	52	G 1/8	M5	15
VGA.10060.1805	10	60	82	G 1/8	M5	18
VGA.10090.1805	10	90	112	G 1/8	M5	25
VGA.14040.1818	14	40	62	G 1/8	G1/8	18
VGA.14080.1818	14	80	102	G 1/8	G1/8	30
VGA.14120.1818	14	120	142	G 1/8	G1/8	43
VGA.20050.1418	20	50	73	G 1/4	G1/8	44
VGA.20100.1418	20	100	123	G 1/4	G1/8	63
VGA.20150.1418	20	150	173	G 1/4	G1/8	78

To optimise position of a vacuum cup.
Side vacuum port.

VTE. – Vacuum Extension Tube

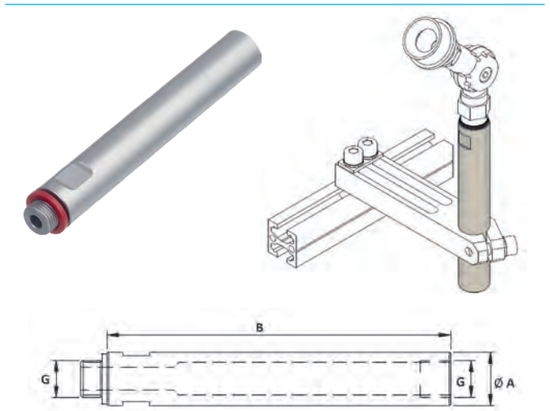

Part No.	A	B	G1	Weight (g)
VTE.1030.05	10	30	M5	6
VTE.1045.05	10	45	M5	9
VTE.1090.05	10	90	M5	16
VTE.1445.18	14	45	G 1/8	14
VTE.1490.18	14	90	G 1/8	26
VTE.2045.14	20	45	G 1/4	30
VTE.2090.14	20	90	G 1/4	58

VSE. – Vacuum Elbow - Adjustable

Part No.	G1	G2	Weight (g)
VSE.18F18M	G1/8	G 1/8	7
VSE.14F14M	G1/4	G 1/4	15

For vacuum only.
Angle of vacuum cup adjustable between 0°and 90°.

Rigid Cup Arms p. 185
Cup Mounts p. 186
Cup Mounts – Long p. 186
Suspensions – Smooth Body p. 188
Suspensions – Threaded Body p. 200
Suspensions – Swivel Head p. 202

VMA. – Vacuum Cup Mounting Bracket - Adjustable

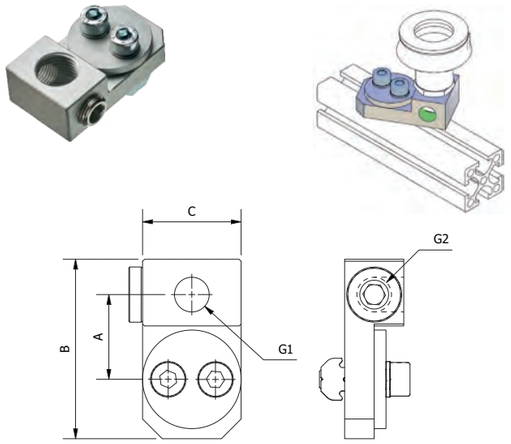

Part No.	A	B	C	G1	G2	Weight (g)
VMA.0505.L	14	28	16	M5	M5	19
VMA.1818.X	21	46	25	G 1/8	G 1/8	44
VMA.1418.X	21	46	25	G 1/4	G 1/8	44

Vacuum connection with adjustable 360° rotation.

VMF. – Vacuum Cup Mounting Bracket - Fixed

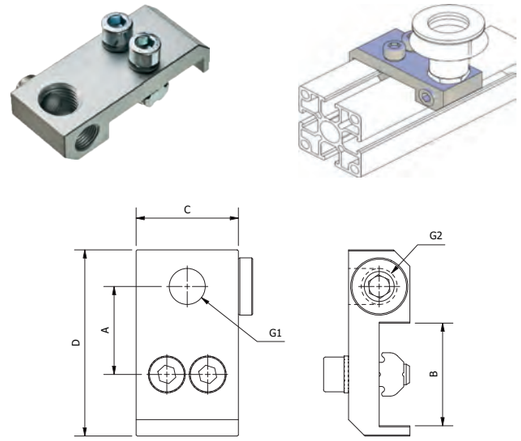

Part No.	A	B	C	D	G1	G2	Weight (g)
VMF.0505.L	17	18	16	32	M5	M5	18
VMF.1818.X	22	25	25	46	G 1/8	G 1/8	46
VMF.1418.X	22	25	25	46	G 1/4	G 1/8	49
VMF.1418.J	29	40	25	60	G 1/4	G 1/8	

Vacuum connection for use where space is limited.

VMB. – Vacuum Cup Mounting Bracket

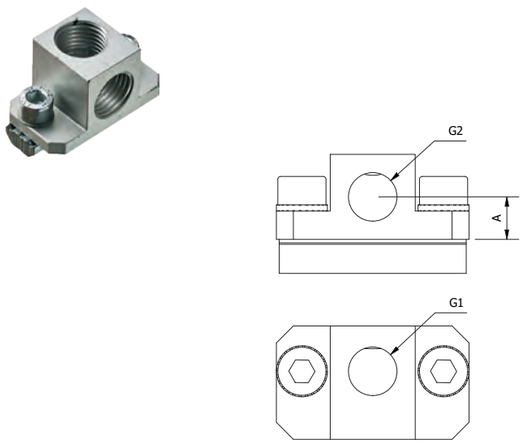

Part No.	A	G1	G2	Weight (g)
VMB.0505.X	4	M5	M5	27
VMB.1818.X	7,5	G 1/8	G 1/8	35
VMB.1414.X	10	G 1/4	G 1/4	39

Vacuum connection for use where space is limited.

VML. – Vacuum Cup Mounting Bracket - Long

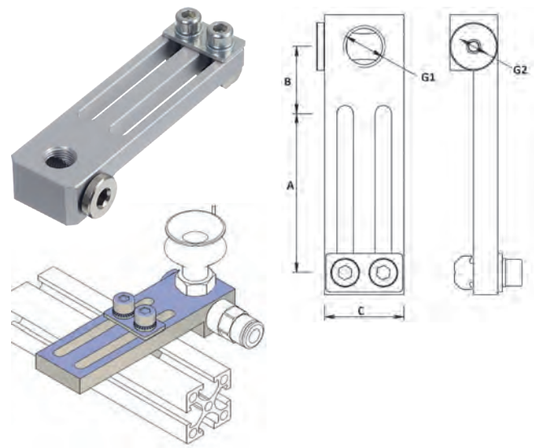

Part No.	A	B	C	G1	G2	Weight (g)
VML.0505.40.L	40	14	16	M5	M5	24
VML.1818.50.X	50	21	25	G 1/8	G 1/8	65
VML.1418.50.X	50	21	25	G 1/4	G 1/8	65
VML.1414.50.J	50	23	25	G 1/4	G 1/4	73

Allows inline adjustment of vacuum cup position.

End of Arm Tooling | Vacuum Cup Mounts *Vacuum Cup Mounts – Long*

Rigid Cup Arms p. 185
Cup Mounts p. 186
Cup Mounts – Long p. 186
Suspensions – Smooth Body p. 188
Suspensions – Threaded Body p. 200
Suspensions – Swivel Head p. 202

VMS. – Vacuum Cup Mounting Bracket - Long, Swivel Head

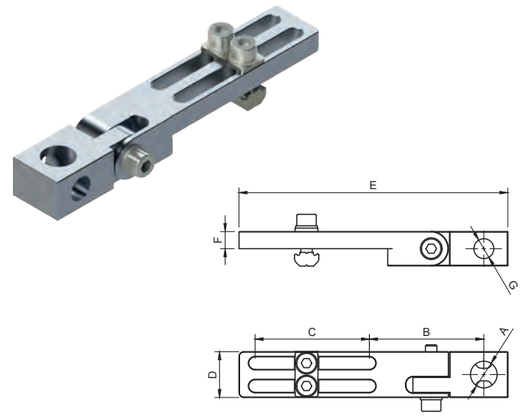

Part No.	A	B	C	D	E	F	G	Weight (g)
VMS.1418.50.X	G1 / 4	50	50	20	117.5	7.5	G 1/8	72

Allows inline and radial adjustment of vacuum cup position.

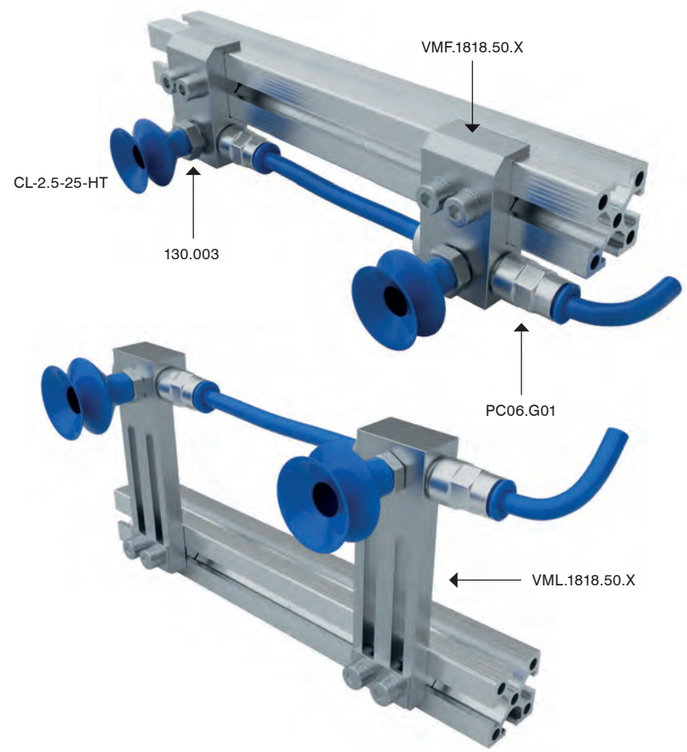

Rigid Cup Arms p. 185
Cup Mounts p. 186
Cup Mounts – Long p. 186
Suspensions – Smooth Body p. 188
Suspensions – Threaded Body p. 200
Suspensions – Swivel Head p. 202

MP.SDR. – Telescopic Suspension Smooth Body (Rotative)

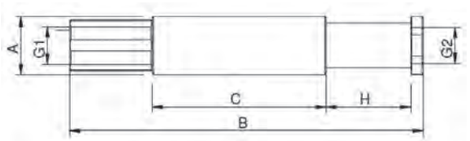

Part No.	A	B	C	G1	G2	H	F(N)	Weight (g)
MP.SDR.1010	10	51	20	M5	M5	10	3,6	7
MP.SDR.1025	10	86	40	M5	M5	25	3,7	11
MP.SDR.1420	14	85	42	G 1/8	G 1/8	20	8,9	19
MP.SDR.1435	14	120	62	G 1/8	G 1/8	35	9,5	26
MP.SDR.2025	20	97	47	G 1/8	G 1/8	25	11	56
MP.SDR.2050	20	147	72	G 1/8	M10	50	11,4	76
MP.SDR.2025.14	20	107	47	G 1/4	G 1/4	25	11	54
MP.SDR.2050.14	20	157	72	G 1/4	G 1/4	50	11,4	74

Body and rod made of aluminium - anodized.

MP.SDN. – Telescopic Suspension Smooth Body (Non-rotative)

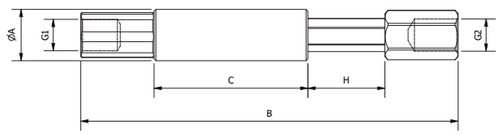

Part No.	A	B	C	G1	G2	H	F(N)	Weight (g)
MP.SDN.1010	10	61	26	M5	M5	10	3,6	8
MP.SDN.1025	10	91	41	M5	M5	25	3,7	11
MP.SDN.1420	14	103	42	G 1/8	G 1/8	20	8,9	25
MP.SDN.1435	14	135	60	G 1/8	G 1/8	35	9,5	32
MP.SDN.2025	20	114	55	G 1/8	G 1/8	25	11	63
MP.SDN.2050	20	167	82	G 1/8	G 1/8	50	11,4	81
MP.SDN.2025.14	20	114	55	G 1/4	G 1/4	25	11	59
MP.SDN.2050.14	20	161	82	G 1/4	G 1/4	50	11,4	77

Body and rod made of aluminium - anodized.
Non Rotative.

MA.GGD. – Spring Loaded Vacuum Cup Arm Smooth Body (Rotative)

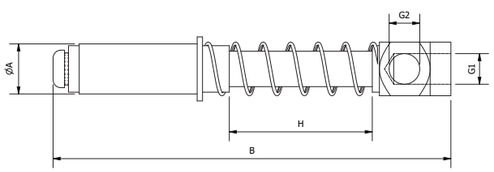

Part No.	A	B	G1	G2	H	F(N)	Weight (g)
MA.GGD.10050510	10	59	M5	M5	10	8	11
MA.GGD.10050530	10	85	M5	M5	30	11	15
MA.GGD.14181815	14	84	G 1/8	G 1/8	15	9	33
MA.GGD.14181840	14	109	G 1/8	G 1/8	40	14,6	38
MA.GGD.20141820	20	109	G 1/4	G 1/8	20	11,7	76
MA.GGD.20141850	20	147	G 1/4	G 1/8	50	16,8	92

For use with round vacuum cups only.

MPTSS – Telescopic Self-Retracting Suspension

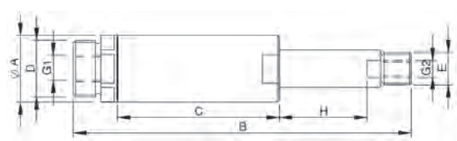

Part No.	A	B	C	D	E	G1	G2	H	F(N)	Weight (g)
MPTSS2025	20	100	48	M17x1	G 1/8	G 1/8	M5	25	3,6	42
MPTSS2050	20	150	73	M17x1	G 1/8	G 1/8	M5	50	4,2	68

Automatic retraction of vacuum cup once vacuum is established.
Reset on part release.

End of Arm Tooling | Vacuum Cup Mounts *Suspensions – Smooth Body*

Rigid Cup Arms p. 185
Cup Mounts p. 186
Cup Mounts – Long p. 186
Suspensions – Smooth Body p. 188
Suspensions – Threaded Body p. 200
Suspensions – Swivel Head p. 202

SZR. – Spring Loaded Vacuum Cup Arm Smooth Body (Rotative)

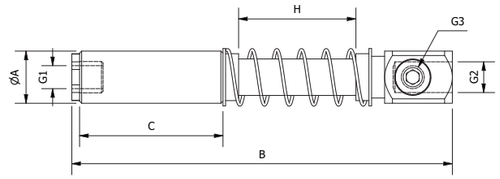

Part No.	A	B	C	G1	G2	G3	H	Weight (g)
SZR.1010.0505	10	59	25	M5	M5		10	28
SZR.1030.0505	10	79	25	M5	M5		30	31
SZR.1415.1818	14	83	32	M5	G 1/8	G 1/8	15	55
SZR.1440.1818	14	108	32	M5	G 1/8	G 1/8	40	60
SZR.2025.1418	20	121	55	G 1/8	G 1/4	G 1/8	25	137
SZR.2050.1418	20	146	55	G 1/8	G 1/4	G 1/8	50	144

For use with round vacuum cups only.

LC. – Level Compensator Smooth Body (Non-rotative)

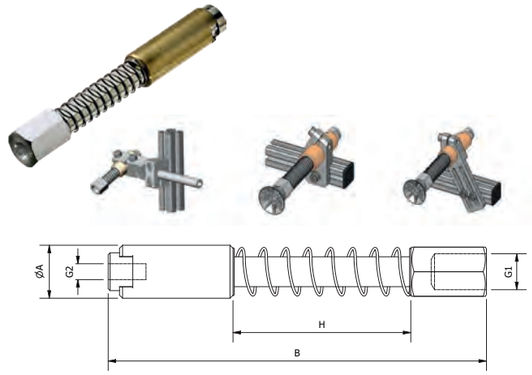

Part No.	A	B	G1	G2	H	F(N)	Weight (g)
LC.10.20	10	69	M5	M5	20	3,4	26
LC.12.20	12	69	M5	M5	20	18,4	33
LC.14.38	14	100	G 1/8	M5	38	23,3	63
LC.20.48	20	125	G 1/4	G 1/8	48	16,6	155

Spring: Steel.
Sliding Parts: Chrome-plated Brass.
Terminal Parts: Anodized Aluminium.

SZN. – Spring Loaded Vacuum Cup Arm Smooth Body (Non-rotative)

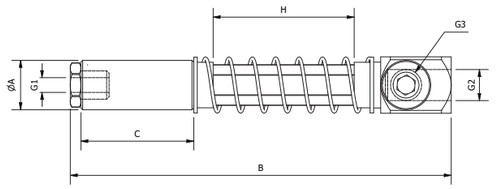

Part No.	A	B	C	G1	G2	G3	H	Weight (g)
SZN.1010.0505	10	59	25	M5	M5		10	25
SZN.1030.0505	10	79	25	M5	M5		30	27
SZN.1415.1818	14	83	32	M5	G 1/8	G 1/8	15	52
SZN.1440.1818	14	108	32	M5	G 1/8	G 1/8	40	55
SZN.2025.1418	20	121	55	G 1/8	G 1/4	G 1/8	25	137
SZN.2050.1418	20	146	55	G 1/8	G 1/4	G 1/8	50	140

For use with round and oval vacuum cups.
Non Rotative.

Rigid Cup Arms p. 185
Cup Mounts p. 186
Cup Mounts – Long p. 186
Suspensions – Smooth Body p. 188
Suspensions – Threaded Body p. 200
Suspensions – Swivel Head p. 202

MP.SDRG. – Telescopic Suspension Threaded Body (Rotative)

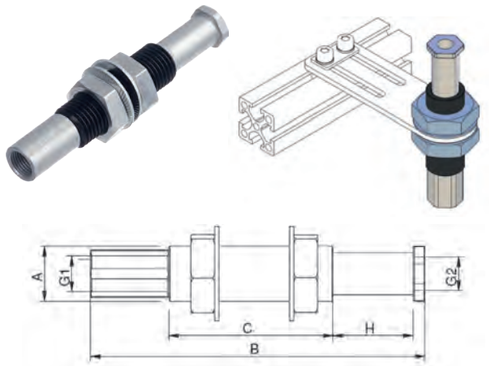

Part No.	A	B	C	G1	G2	H	F(N)	Weight (g)
MP.SDRG.1010	M10x1	51	20	M5	M5	10	3,6	12
MP.SDRG.1025	M10x1	86	40	M5	M5	25	3,7	16
MP.SDRG.1420	M14x1.5	85	42	G 1/8	G 1/8	20	8,9	30
MP.SDRG.1435	M14x1.5	120	62	G 1/8	G 1/8	35	9,5	37
MP.SDRG.1620	M16x1	85	42	G 1/8	G 1/8	20	8,9	37
MP.SDRG.2025	M20x1.5	97	47	G 1/8	G 1/8	25	11	88
MP.SDRG.2050	M20x1.5	147	72	G 1/8	G 1/8	50	11,4	108

Body and rod made of aluminium - anodized.

MA.GGDG. – Spring Loaded Vacuum Cup Arm Threaded Body (Rotative)

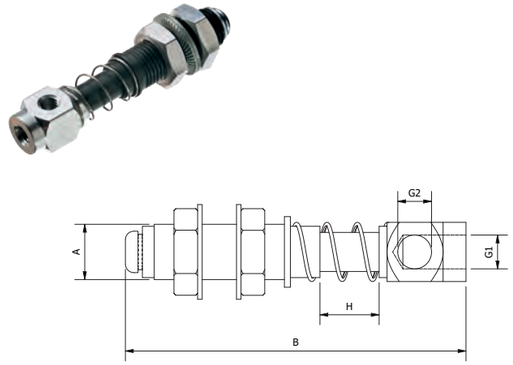

Part No.	A	B	G1	G2	H	F(N)	Weight (g)
MA.GGDG.10050510	M10x1	59	M5	M5	10	8	17
MA.GGDG.10050530	M10x1	85	M5	M5	30	11	20
MA.GGDG.14181815	M14x1.5	86	G 1/8	G 1/8	15	9	41
MA.GGDG.14181840	M14x1.5	111	G 1/8	G 1/8	40	14.6	45
MA.GGDG.20141820	M20x1.5	109	G 1/4	G 1/8	20	11.7	99
MA.GGDG.20141850	M20x1.5	147	G 1/4	G 1/8	50	16.8	118

For use with round vacuum cups only.

MP.SDNG. – Telescopic Suspension Threaded Body (Non-rotative)

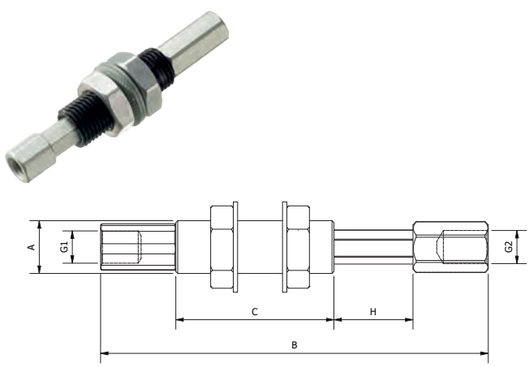

Part No.	A	B	C	G1	G2	H	F(N)	Weight (g)
MP.SDNG.1010	M10x1	61	26	M5	M5	10	3,6	13
MP.SDNG.1025	M10x1	91	41	M5	M5	25	3,7	16
MP.SDNG.1420	M14x1.5	103	42	G 1/8	G 1/8	20	8,9	36
MP.SDNG.1435	M14x1.5	135	60	G 1/8	G 1/8	35	9,5	42
MP.SDNG.2025	M20x1.5	114	55	G 1/8	G 1/8	25	11	96
MP.SDNG.2050	M20x1.5	174	82	G 1/8	G 1/8	50	11,4	115
MP.SDNG.2025.14	M20x1.5	114	55	G 1/4	G 1/4	25	11	92
MP.SDNG.2050.14	M20x1.5	167	82	G 1/4	G 1/4	50	11,4	111

Body and rod made of aluminium - anodized.
Non Rotative.

SR. – Spring Rod

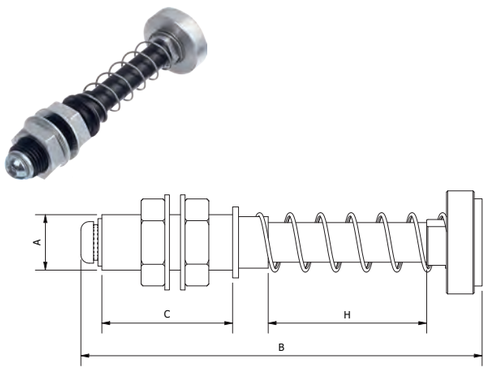

Part No.	A	B	C	H	Weight (g)
SRR.1440	M14x1.5	101	42	40	47

End of Arm Tooling | Vacuum Cup Mounts *Suspensions - Threaded Body*

Rigid Cup Arms p. 185
Cup Mounts p. 186
Cup Mounts – Long p. 186
Suspensions – Smooth Body p. 188
Suspensions – Threaded Body p. 200
Suspensions – Swivel Head p. 202

SZRG. – Spring Loaded Vacuum Cup Arm Threaded Body (Rotative)

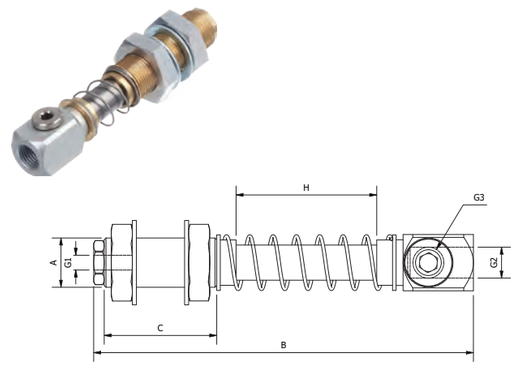

Part No.	A	B	C	G1	G2	G3	H	Weight (g)
SZRG.1010.0505	M10x1	59	25	M5	M5		10	32
SZRG.1030.0505	M10x1	79	25	M5	M5		30	35
SZRG.1415.1818	M14x1.5	83	32	M5	G 1/8	G 1/8	15	67
SZRG.1440.1818	M14x1.5	108	32	M5	G 1/8	G 1/8	40	72
SZRG.2025.1418	M20x1.5	121	55	G 1/8	G 1/4	G 1/8	25	171
SZRG.2050.1418	M20x1.5	146	55	G 1/8	G 1/4	G 1/8	50	187

For use with round vacuum cups only.

LC.M. – Level Compensator Threaded Body (Non-rotative)

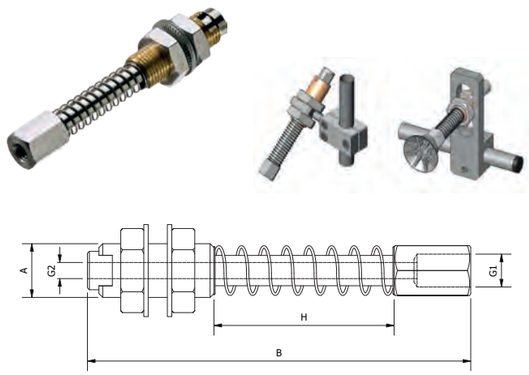

Part No.	A	B	G1	G2	H	F(N)	Weight (g)
LC.M10.20	M10x1	70	M5	M5	20	3,4	36
LC.M12.20	M12x1.25	77	G 1/8	M5	20	6	40
LC.M14.38	M14x1.5	100	G 1/8	M5	38	23,2	71
LC.M20.48	M20x1.5	125	G 1/4	G 1/8	48	16,7	189

Spring: Steel.
Sliding Parts: Chrome-plated Brass.
Terminal Parts: Anodized Aluminium.

SZNG. – Spring Loaded Vacuum Cup Arm Threaded Body (Non-rotative)

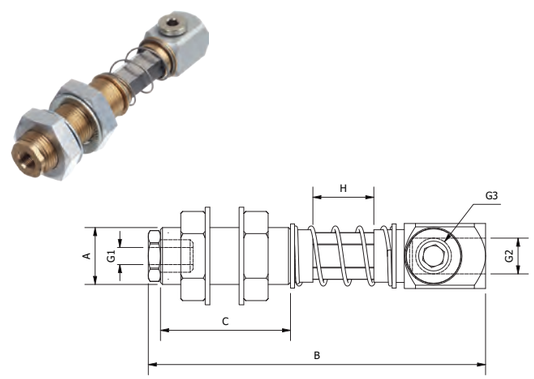

Part No.	A	B	C	G1	G2	G3	H	Weight (g)
SZNG.1010.0505	M10x1	59	25	M5	M5	-	10	30
SZNG.1030.0505	M10x1	79	25	M5	M5	-	30	32
SZNG.1415.1818	M14x1.5	83	32	M5	G 1/8	G 1/8	15	63
SZNG.1440.1818	M14x1.5	108	32	M5	G 1/8	G 1/8	40	65
SZNG.2025.1418	M20x1.5	121	55	G 1/8	G 1/4	G 1/8	25	170
SZNG.2050.1418	M20x1.5	146	55	G 1/8	G 1/4	G 1/8	50	173

For use with round and oval vacuum cups.
Non Rotative.

Rigid Cup Arms p. 185
Cup Mounts p. 186
Cup Mounts – Long p. 186
Suspensions – Smooth Body p. 188
Suspensions – Threaded Body p. 200
Suspensions – Swivel Head p. 202

MP.SSN. – Telescopic Suspension Smooth Body (Non-rotative) Swivel Head

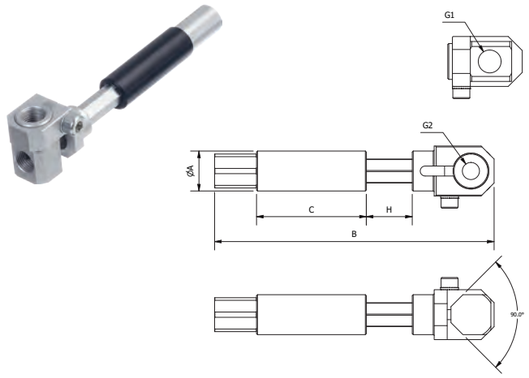

Part No.	A	B	C	G1	G2	H	F(N)	Weight (g)
MP.SSN.10100505	10	78	26	M5	M5	10	3,6	20
MP.SSN.10250505	10	108	41	M5	M5	25	3,7	23
MP.SSN.14201818	14	116	42	G 1/8	G 1/8	20	8,9	45
MP.SSN.14351818	14	148	60	G 1/8	G 1/8	35	9,5	51
MP.SSN.20251418	20	140	55	G 1/4	G 1/8	25	11	102
MP.SSN.20501418	20	193	82	G 1/4	G 1/8	50	11,4	121

Body and rod made of aluminium - anodized.
Angle of vacuum cup adjustable between 0°and 90°.
Non Rotative.

MP.SSNG. – Telescopic Suspension Threaded Body (Non-rotative) Swivel Head

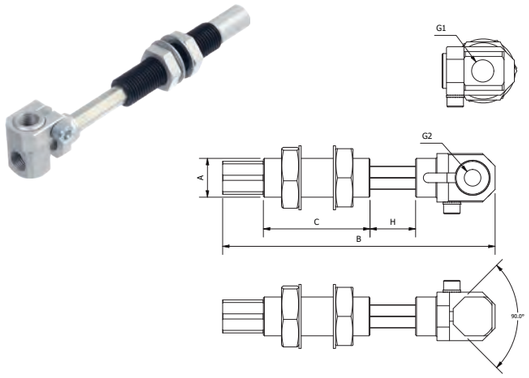

Part No.	A	B	C	G1	G2	H	F(N)	Weight (g)
MP.SSNG.10100505	M10x1	78	26	M5	M5	10	3,6	13
MP.SSNG.10250505	M10x1	108	41	M5	M5	25	3,7	16
MP.SSNG.14201818	M14x1.5	116	42	G 1/8	G 1/8	20	8,9	36
MP.SSNG.14351818	M14x1.5	148	60	G 1/8	G 1/8	35	9,5	42
MP.SSNG.20251418	M20x1.5	140	55	G 1/4	G 1/8	25	11	96
MP.SSNG.20501418	M20x1.5	193	82	G 1/4	G 1/8	50	11,4	115

Body and rod made of aluminium - anodized.
Angle of vacuum cup adjustable between 0°and 90°.
Non Rotative.

SZP. – Spring Loaded Vacuum Cup Arm Smooth Body (Non-rotative) Swivel Head

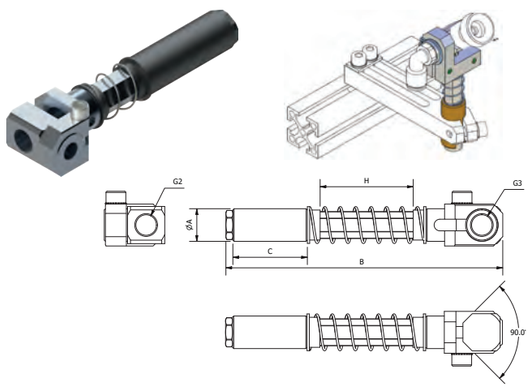

Part No.	A	B	C	G2	G3	H	Weight (g)
SZP.1010.0505	10	76	25	M5		10	32
SZP.1030.0505	10	96	25	M5		30	35
SZP.1415.1818	14	94	32	G 1/8	G 1/8	15	67
SZP.1440.1818	14	119	32	G 1/8	G 1/8	40	72
SZP.2025.1418	20	131	55	G 1/4	G 1/8	25	171
SZP.2050.1418	20	156	55	G 1/4	G 1/8	50	187

For use with round and oval vacuum cups .
Angle of vacuum cup adjustable between 0°and 90°.
Non Rotative.

SZPG. – Spring Loaded Vacuum Cup Arm Threaded Body (Non-rotative) Swivel Head

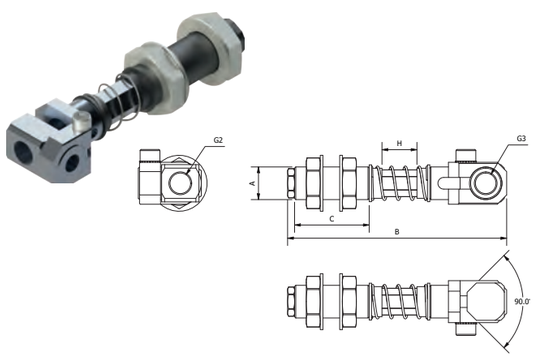

Part No.	A	B	C	G2	G3	H	Weight (g)
SZPG.1010.0505	M10x1	76	25	M5	-	10	39
SZPG.1030.0505	M10x1	96	25	M5	-	30	44
SZPG.1415.1818	M14x1.5	94	32	G 1/8	G 1/8	15	70
SZPG.1440.1818	M14x1.5	119	32	G 1/8	G 1/8	40	90
SZPG.2025.1418	M20x1.5	131	55	G 1/4	G 1/8	25	188

For use with round and oval vacuum cups.
Angle of vacuum cup adjustable between 0°and 90°.
Non Rotative.

Rigid Cup Arms p. 185
Cup Mounts p. 186
Cup Mounts – Long p. 186
Suspensions – Smooth Body p. 188
Suspensions – Threaded Body p. 200
Suspensions – Swivel Head p. 202

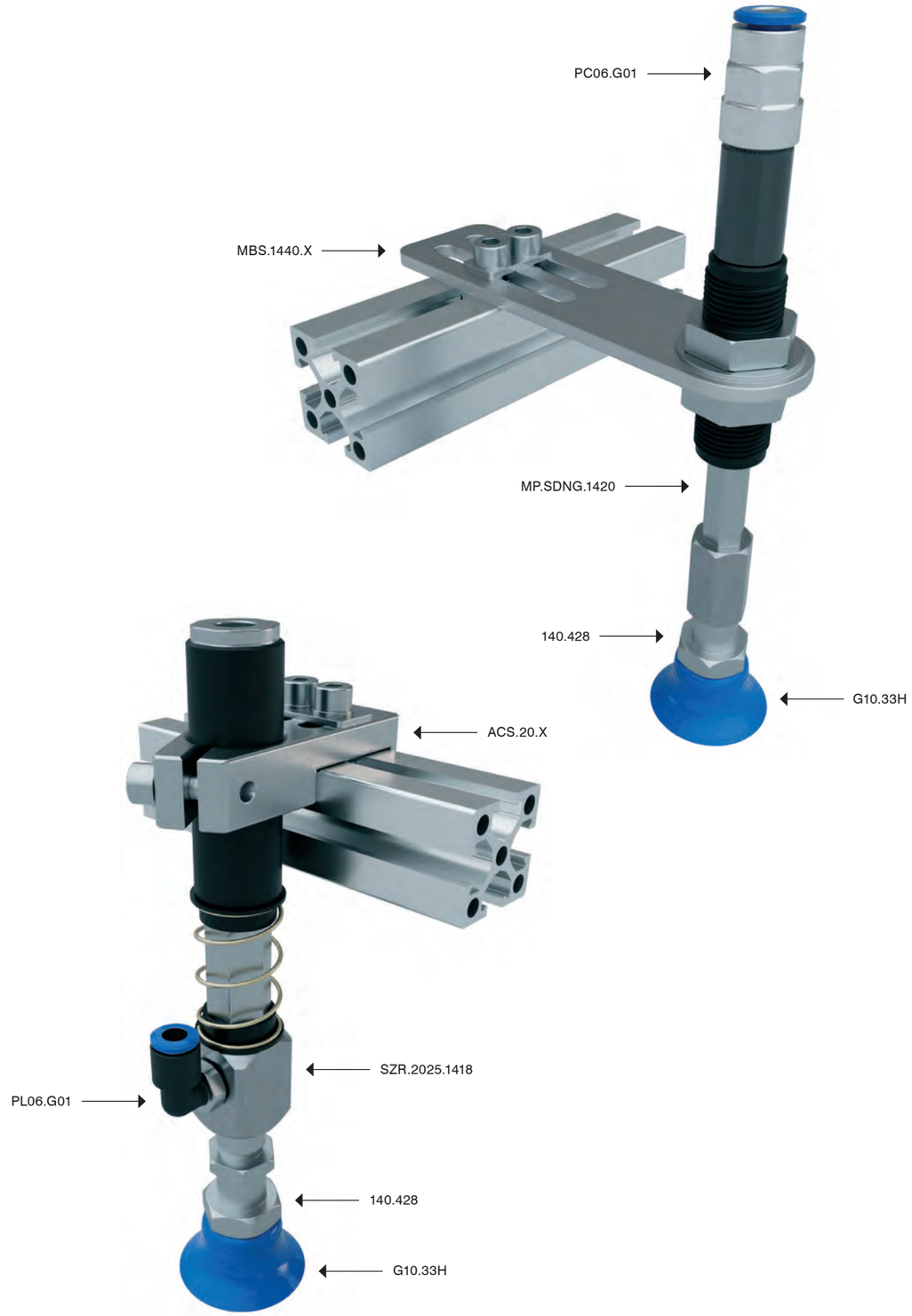

06. Vacuum Cups

G Series, Flat Cups	p. 196	CL Series, 1.5 Bellow Cups	p. 200	Fittings for G Series Cups	p. 204
F Series, Flat Cups with Cleats	p. 197	CL Series, 2.5 Bellow Cups	p. 201	Multiflex, 1.5 Bellow Cups	p. 205
B Series, 1.5 Bellow Cups	p. 198	G Series, 1.5 Bellow Cups with Foam Ring	p. 202	Multiflex, 2.5 Bellow Cups	p. 206
CM Series, 1.5 Baellow Cups	p. 199	G Series, 2.5 Bellow Cups with Foam Ring	p. 203		

196 G Series, Flat Cups

197 F Series, Flat Cups with Cleats

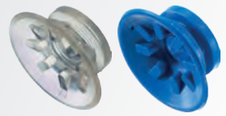

198 B Series, 1.5 Bellow Cups

199 CM Series, 1.5 Bellow Cups

200 CL Series, 1.5 Bellow Cups

201 CL Series, 2.5 Bellow Cups

202 G Series, 1.5 Bellow Cups with Foam Ring

203 G Series, 2.5 Bellow Cups with Foam Ring

204 Fittings for G Series Cups

205 Multiflex, 1.5 Bellow Cups

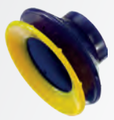

206 Multiflex, 2.5 Bellow Cups

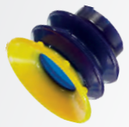

Type Selection Guide

Type	
Flat Cups	The flat suction cups provide accurancy in load gripping and speeds up the cycle process. Flat cups are used for flat and slightly curved surfaces.
1,5 Bellow Cups	The 1,5 bellow cups combine the advantages of the flat suction cups (precision and positioning) with the freedom of belows (angle and flexibility). They provide flexibility, precision and low internal volume suitable for high-speed applications.
2,5 Bellow Cups	The suction cups with 2,5 bellow are recommended for gripping products with un-even surfaces (large deflection). The 2,5 bellow allow objects to be gripped from an angle (ball-joint effect).

Material Properties

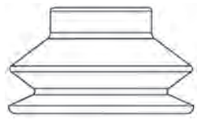

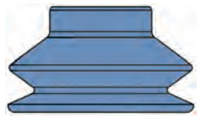

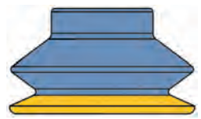

Application	Silicone	FlexTemp HT	Multiflex
Ozone resistance	✓✓✓	✓✓	✓✓✓
Oil resistance	✓	✓✓✓	✓✓
Wear resisitance	✓✓	✓✓	✓✓✓
Tensile strength (lifting force)	✓	✓	✓✓✓
Leaves marks on products	✓	✓✓	✓✓✓
Temperature resistance	-70 to + 200°C	-40 to + 160°C	-20 to + 80°C
Shore hardness	30-60°	60°	30-60°

The holding force of the suction cups increases proportionally with the difference between the ambient pressure and the pressure inside the cup.

The holding force of a suction pad is calculated with the formula:
F = Δp x A.
F = Holding force.
Δp = Difference between ambient pressure and pressure of the system.
A = Effective suction area (the effecive area of a suction pad under vacuum).

This means the holding force is proportional to the pressure difference and the suction area. The greater the difference between ambient pressure and pressure in the suction cup or the larger the effective suction area, the greater the holding force.
The force can vary depending on a change of the pressure difference and area parameters.

G Series, Flat Cups	**p. 196**	CL Series, 1.5 Bellow Cups	p. 200	Fittings for G Series Cups	p. 204
F Series, Flat Cups with Cleats	p. 197	CL Series, 2.5 Bellow Cups	p. 201	Multiflex, 1.5 Bellow Cups	p. 205
B Series, 1.5 Bellow Cups	p. 198	G Series, 1.5 Bellow Cups with Foam Ring	p. 202	Multiflex, 2.5 Bellow Cups	p. 206
CM Series, 1.5 Baellow Cups	p. 199	G Series, 2.5 Bellow Cups with Foam Ring	p. 203		

G Series, Flat Vacuum Cups

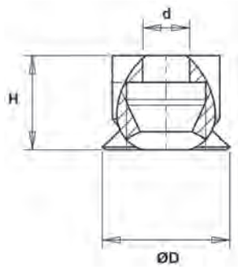

Part No. Silicone	Part No. TempFlex HT	ØD	d	H		Fitting	Fitting	Weight (g)
G10.06F	**G10.06H**	6	2,0	4,5	0,3		140.005	0,06
G10.09F	**G10.09H**	9,5	3,5	7	0,5		140.405	0,21
G10.11F	**G10.11H**	11,0	3,5	10,0	0,5	140.410	140.414	0,5
G10.16F	**G10.16H**	16,2	3,5	10,5	1,5	140.410	140.414	0,62
G10.22F	**G10.22H**	22,0	8,0	11,5	2,5	140.428	140.432	1,1
G10.33F	**G10.33H**	32,0	8,0	12,5	3,5	140.428	140.432	2
G10.42F	**G10.42H**	41,0	8,0	15,5	4,5	140.428	140.432	4
G10.53F	**G10.53H**	51,5	8,0	20,0	6,0	140.428	140.432	8

For grpping flat, smooth and slightly curved products.
HNBR - Suitable for handling plastic parts.
HNBR - PWIS free.
HNBR: Temperature range, -25 to +150°C.
Food grade silicone (FDA approved).
Silcone: Temperature range, -70 to +200°C.

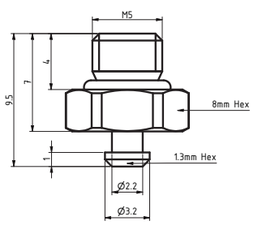

140.005

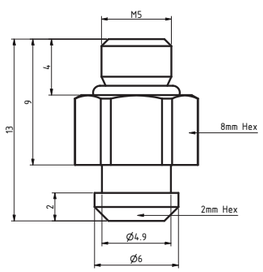

140.405

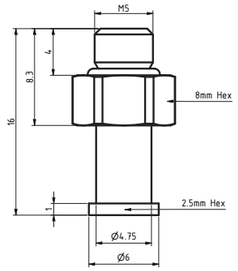

140.410

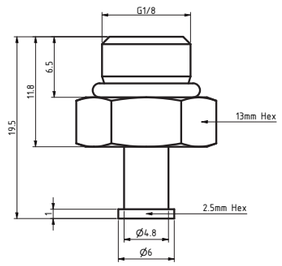

140.414

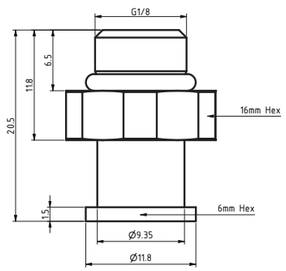

140.428

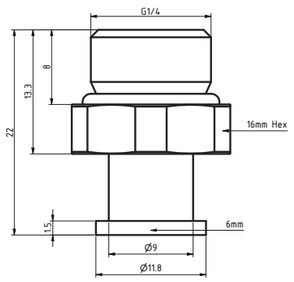

140.432

G Series, Flat Cups	p. 196	CL Series, 1.5 Bellow Cups	p. 200	Fittings for G Series Cups	p. 204
F Series, Flat Cups with Cleats	**p. 197**	CL Series, 2.5 Bellow Cups	p. 201	Multiflex, 1.5 Bellow Cups	p. 205
B Series, 1.5 Bellow Cups	p. 198	G Series, 1.5 Bellow Cups with Foam Ring	p. 202	Multiflex, 2.5 Bellow Cups	p. 206
CM Series, 1.5 Baellow Cups	p. 199	G Series, 2.5 Bellow Cups with Foam Ring	p. 203		

F Series, Flat Vacuum Cups with Cleats

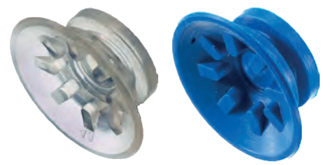

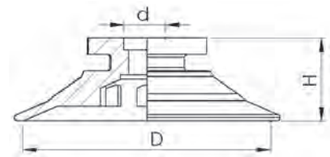

Part No. Silicone	Part No. TempFlex HT	ØD	H		Fitting	Fitting	Fitting	Weight (g)
F20S	**F20HT**	22	8	0,5	F250			
F25S	**F25HT**	28	9	1	F250			
F30S	**F30HT**	32	10	1,5	F250			
F40S	**F40HT**	42	13	2		F251		
F50S	**F50HT**	53	17,5	3			F252	

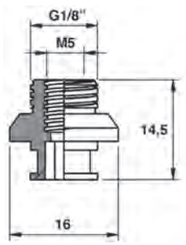

F250

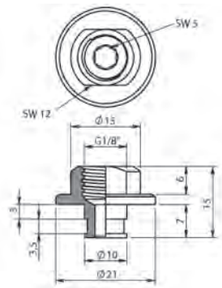

F251

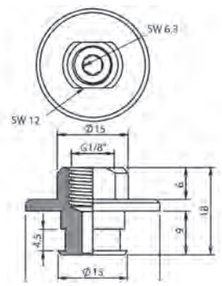

F252

G Series, Flat Cups	p. 196	CL Series, 1.5 Bellow Cups	p. 200	Fittings for G Series Cups	p. 204
F Series, Flat Cups with Cleats	p. 197	CL Series, 2.5 Bellow Cups	p. 201	Multiflex, 1.5 Bellow Cups	p. 205
B Series, 1.5 Bellow Cups	**p. 198**	G Series, 1.5 Bellow Cups with Foam Ring	p. 202	Multiflex, 2.5 Bellow Cups	p. 206
CM Series, 1.5 Baellow Cups	p. 199	G Series, 2.5 Bellow Cups with Foam Ring	p. 203		

B Series, 1.5 Bellow Vacuum Cups

Ø5 - Ø16

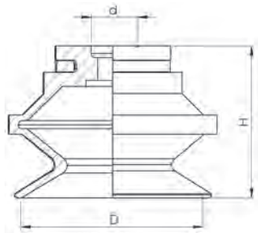

Ø20 - Ø50

Part No. Silicone	Part No. TempFlex HT	ØD	D1	d	H		Fitting	Fitting	Weight (g)
B05S	**B05HT**	5		2,6	9,5	2		130.591	0,12
B08S	**B08HT**	8,8		2	12	2		130.591	0,2
B11S	**B11HT**	11,0		4	17	5	F134	130.003	1,0
B16S	**B16HT**	16,0		4	19	7	F134	130.003	1,4
B20S	**B20HT**	21,5	24,0	4,8	20	9	F250		2,5
B30S	**B30HT**	33,0	36,0	6	26	9	F250		6,5
B40S	**B40HT**	42,0	46,0	7	28	9	F251		10
B50S	**B50HT**	52,0	58,0	10,5	35	12	F252		22

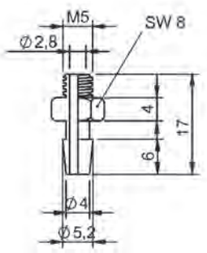

F134

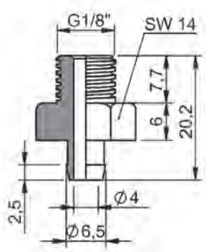

130.003

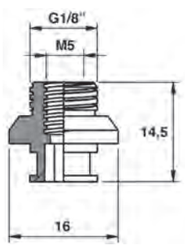

F250

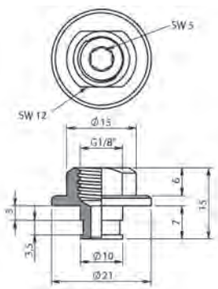

F251

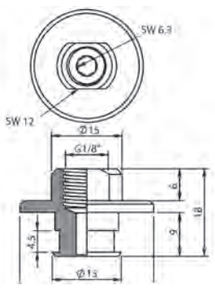

F252

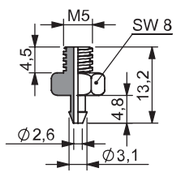

130.591

G Series, Flat Cups	p. 196	CL Series, 1.5 Bellow Cups	p. 200	Fittings for G Series Cups	p. 204
F Series, Flat Cups with Cleats	p. 197	CL Series, 2.5 Bellow Cups	p. 201	Multiflex, 1.5 Bellow Cups	p. 205
B Series, 1.5 Bellow Cups	p. 198	G Series, 1.5 Bellow Cups with Foam Ring	p. 202	Multiflex, 2.5 Bellow Cups	p. 206
CM Series, 1.5 Baellow Cups	**p. 199**	G Series, 2.5 Bellow Cups with Foam Ring	p. 203		

CM Series, 1.5 Bellow Vacuum Cups

CONVUM COMPATIBLE

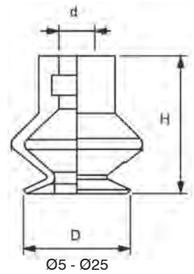

Ø5 - Ø25

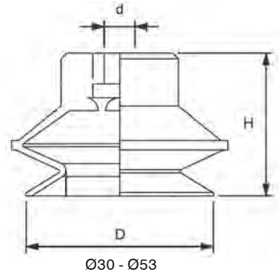

Ø30 - Ø53

Part No. Silicone	Part No. TempFlex HT	ØD	d	H		Fitting	Fitting	Weight (g)
CM-1.5-10-S	**CM-1.5-10-HT**	10	2	13,5	4	130.301	130.009	0,7
CM-1.5-15-S	**CM-1.5-15-HT**	15	4	16	5	130.301	130.009	0,7
CM-1.5-20-S	**CM-1.5-20-HT**	20	5	20	8	130.030	130.274	2,4
CM-1.5-30-S	**CM-1.5-30-HT**	32	6	30,5	9	130.030	130.274	9
CM-1.5-40-S	**CM-1.5-40-HT**	40	6	30,5	10	130.030	130.274	12

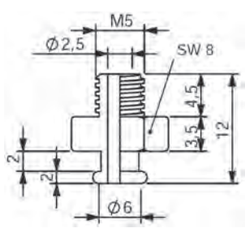

130,301

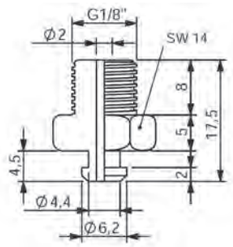

130,009

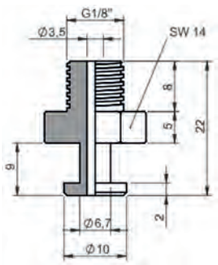

130,030

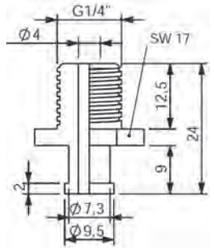

130,274

G Series, Flat Cups	p. 196	**CL Series, 1.5 Bellow Cups**	**p. 200**	Fittings for G Series Cups	p. 204
F Series, Flat Cups with Cleats	p. 197	CL Series, 2.5 Bellow Cups	p. 201	Multiflex, 1.5 Bellow Cups	p. 205
B Series, 1.5 Bellow Cups	p. 198	G Series, 1.5 Bellow Cups with Foam Ring	p. 202	Multiflex, 2.5 Bellow Cups	p. 206
CM Series, 1.5 Baellow Cups	p. 199	G Series, 2.5 Bellow Cups with Foam Ring	p. 203		

CL Series, 1.5 Bellow Vacuum Cups

COVAL COMPATIBLE

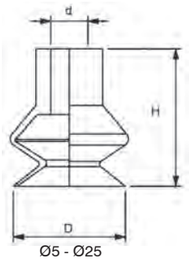

Ø5 - Ø25

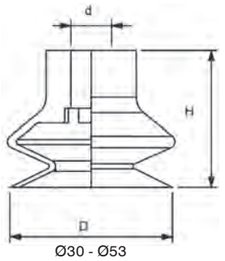

Ø30 - Ø53

Part No. Silicone	Part No. TempFlex HT	ØD	d	H		Fitting	Fitting	Weight (g)
CL-1.5-06-S	**CL-1.5-06-HT**	6	4	9	5	130.301	130.009	0,2
CL-1.5-11-S	**CL-1.5-11-HT**	11	5	16	4,5	130.013	130.003	1
CL-1.5-14-S	**CL-1.5-14-HT**	14	5	15	4	130.013	130.003	1
CL-1.5-16-S	**CL-1.5-16-HT**	16	5	19	6	130.013	130.003	1,2
CL-1.5-20-S	**CL-1.5-20-HT**	20	4	16	4	130.013	130.003	1,7
CL-1.5-25-S	**CL-1.5-25-HT**	25	4	23	9	130.013	130.003	2,4
CL-1.5-30-S	**CL-1.5-30-HT**	33	8	28	12	130.132	130.190	7
CL-1.5-43-S	**CL-1.5-43-HT**	43	8	28	12	130.132	130.190	10
CL-1.5-53-S	**CL-1.5-53-HT**	53	8	34	11	130.132	130.190	19
CL-1.5-63-S	**CL-1.5-63-HT**	63	8	34	15	130.132	130.190	28
CL-1.5-78-S	**CL-1.5-78-HT**	78	12	47	14	130.622		55

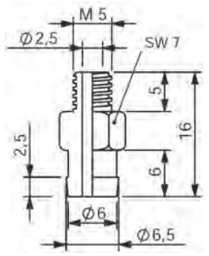

130.013

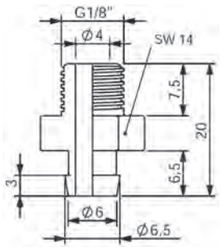

130.003

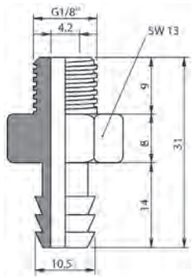

130.132

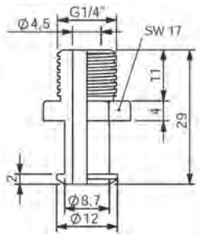

130.190

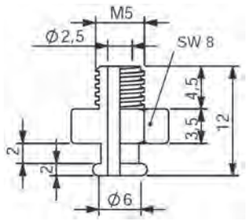

130,301

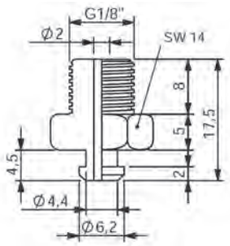

130,009

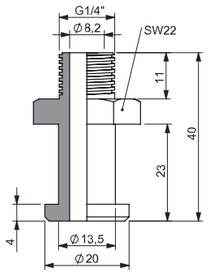

130.622

G Series, Flat Cups	p. 196	CL Series, 1.5 Bellow Cups	p. 200	Fittings for G Series Cups	p. 204
F Series, Flat Cups with Cleats	p. 197	**CL Series, 2.5 Bellow Cups**	**p. 201**	Multiflex, 1.5 Bellow Cups	p. 205
B Series, 1.5 Bellow Cups	p. 198	G Series, 1.5 Bellow Cups with Foam Ring	p. 202	Multiflex, 2.5 Bellow Cups	p. 206
CM Series, 1.5 Baellow Cups	p. 199	G Series, 2.5 Bellow Cups with Foam Ring	p. 203		

CL Series, 2.5 Bellow Vacuum Cups

COVAL COMPATIBLE

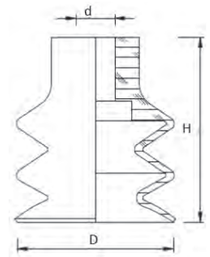

Part No. Silicone	Part No. TempFlex HT	ØD	d	H		Fitting	Fitting	Weight (g)
CL-2.5-5	**CL-2.5-5-HT**	5	4	14	3	130.013	130.003	0,3
CL-2.5-7	**CL-2.5-7-HT**	7	3,8	14	3	130.013	130.003	0,5
CL-2.5-9	**CL-2.5-9-HT**	9	4	15	2	130.013	130.003	0,6
CL-2.5-12	**CL-2.5-12-HT**	12	5	21	8,5	130.013	130.003	1,0
CL-2.5-14	**CL-2.5-14-HT**	14	4	22	11	130.013	130.003	1,3
CL-2.5-20	**CL-2.5-20-HT**	20	4,5	23	8	130.013	130.003	2,1
CL-2.5-25	**CL-2.5-25-HT**	25	4	34	19	130.013	130.003	3,5
CL-2.5-32	**CL-2.5-32-HT**	32	8	37	13	130.132	130.190	8,3
CL-2.5-42	**CL-2.5-42-HT**	42	8	46	19	130.132	130.190	18,0
CL-2.5-52	**CL-2.5-52-HT**	52	8	49	27	130.132	130.190	24,2
CL-2.5-62	**CL-2.5-62-HT**	62	9	53	25	130.093	130.281	45,7

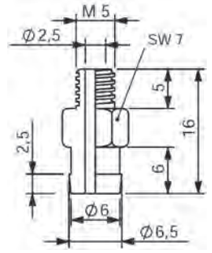

130.013

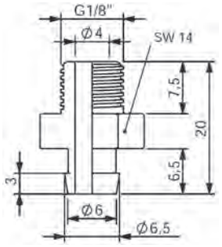

130.003

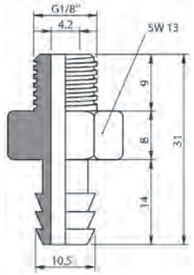

130.132

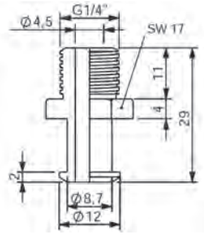

130.190

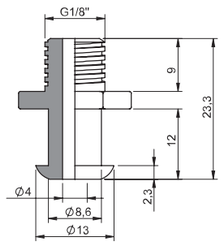

130.093

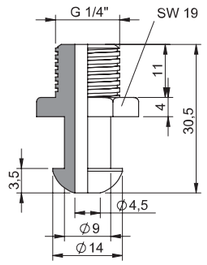

130.281

G Series, Flat Cups	p. 196	CL Series, 1.5 Bellow Cups	p. 200	Fittings for G Series Cups	p. 204
F Series, Flat Cups with Cleats	p. 197	CL Series, 2.5 Bellow Cups	p. 201	Multiflex, 1.5 Bellow Cups	p. 205
B Series, 1.5 Bellow Cups	p. 198	**G Series, 1.5 Bellow Cups with Foam Ring**	**p. 202**	Multiflex, 2.5 Bellow Cups	p. 206
CM Series, 1.5 Baellow Cups	p. 199	G Series, 2.5 Bellow Cups with Foam Ring	p. 203		

G Series, Suction Cups, 1.5 Bellow with Silicone Foam Ring

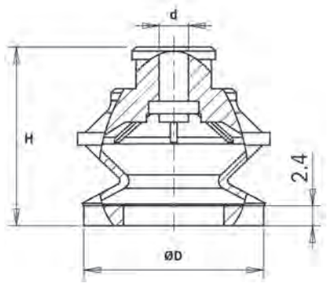

Part No.	ØD	d	H		Fitting	Fitting	Weight (g)
G15.16F.SF	15,50	3,4	21,2	7,5	140.410	140.414	2,2
G15.22F.SF	21,5	3,5	21,4	11	140.410	140.414	2,0
G15.33F.SF	32,5	8	28,4	16	140.428	140.432	6,2
G15.42F.SF	41,5	8	30,6	13	140.428	140.432	9,3
G15.53F.SF	52,5	8	37,4	20	140.428	140.432	16,0

Ideal to handle uneven, textured and porous surfaces.
Ring in mark-free silicone foam.
Transparent Silicne - 50 Shore.
Temperature range -55 to +200°C.

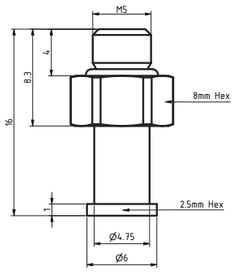

140.410

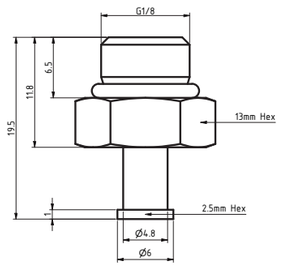

140.414

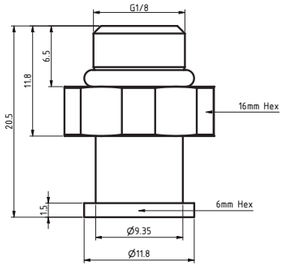

140.428

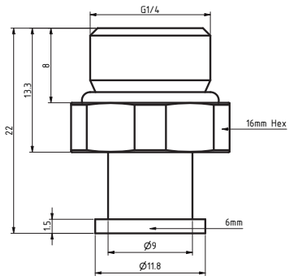

140.432

G Series, Flat Cups	p. 196	CL Series, 1.5 Bellow Cups	p. 200	Fittings for G Series Cups	p. 204
F Series, Flat Cups with Cleats	p. 197	CL Series, 2.5 Bellow Cups	p. 201	Multiflex, 1.5 Bellow Cups	p. 205
B Series, 1.5 Bellow Cups	p. 198	G Series, 1.5 Bellow Cups with Foam Ring	p. 202	Multiflex, 2.5 Bellow Cups	p. 206
CM Series, 1.5 Baellow Cups	p. 199	**G Series, 2.5 Bellow Cups with Foam Ring**	**p. 203**		

G Series, Suction Cups 2.5 Bellow with Silicone Foam Ring

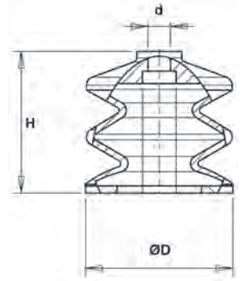

Part No.	ØD	d	H		Fitting	Fitting	Weight (g)
G25.16F.SF	16	3,5	24	10	140.410	140.414	1,2
G25.22F.SF	22	3,5	24	19	140.410	140.414	2,2
G25.33F.SF	33	8	32,6	16	140.428	140.432	7,2
G25.42F.SF	42	8	43,5	21	140.428	140.432	16
G25.53F.SF	53	8	50,5	26	140.428	140.432	27

Ideal to handle uneven, textured and porous surfaces.
Ring in mark-free silicone foam.
Enable to compensate for differences in heigh.
Transparent Silicne - 50 Shore.
Temperature range -70 to +200°C.

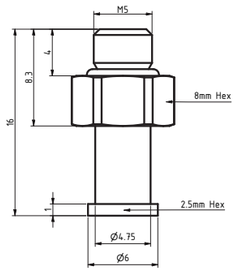

140.410

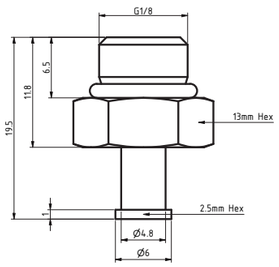

140.414

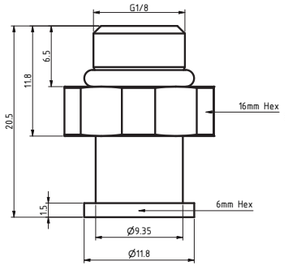

140.428

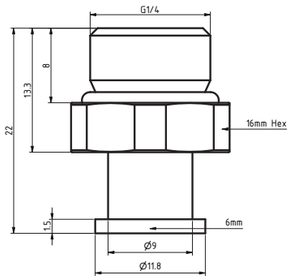

140.432

G Series, Flat Cups	p. 196	CL Series, 1.5 Bellow Cups	p. 200	**Fittings for G Series Cups**	**p. 204**
F Series, Flat Cups with Cleats	p. 197	CL Series, 2.5 Bellow Cups	p. 201	Multiflex, 1.5 Bellow Cups	p. 205
B Series, 1.5 Bellow Cups	p. 198	G Series, 1.5 Bellow Cups with Foam Ring	p. 202	Multiflex, 2.5 Bellow Cups	p. 206
CM Series, 1.5 Baellow Cups	p. 199	G Series, 2.5 Bellow Cups with Foam Ring	p. 203		

Fittings for G Series Vacuum Cups

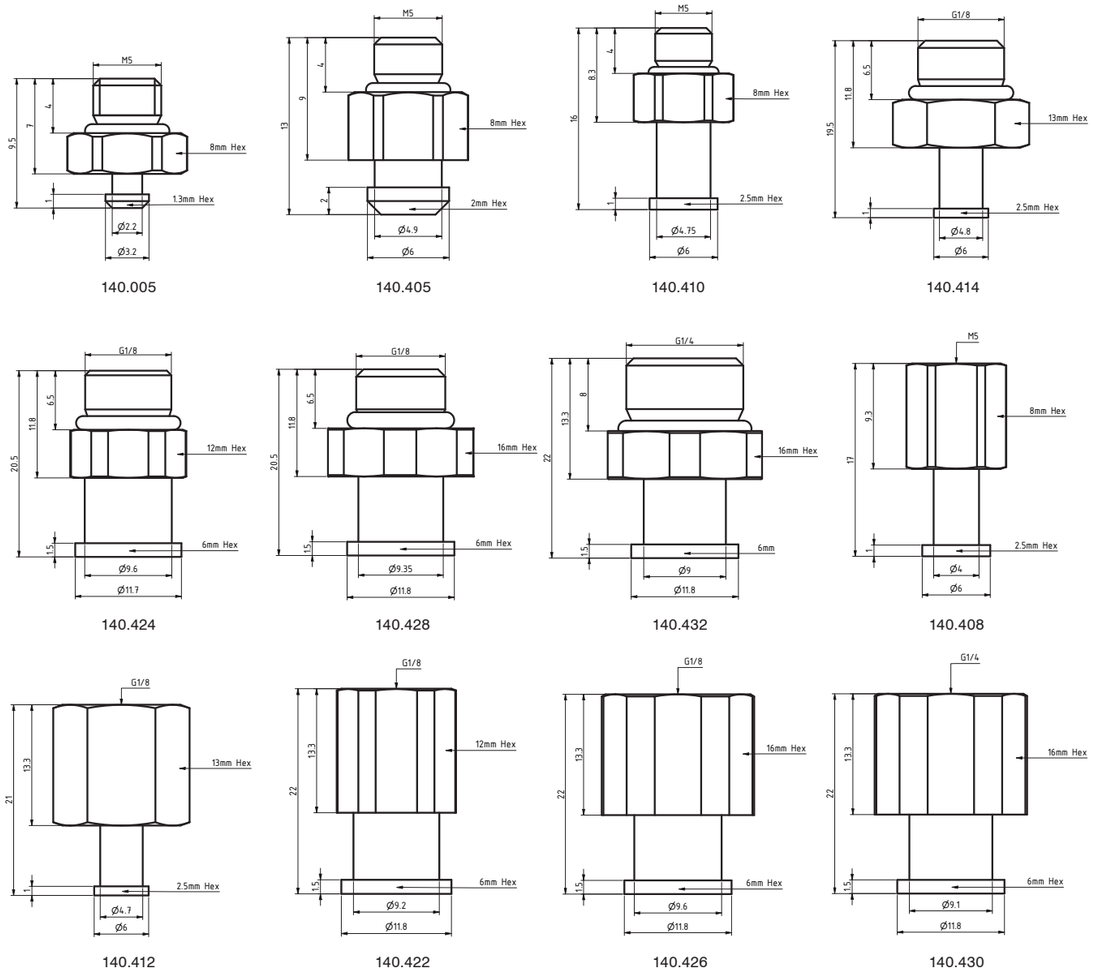

G Series, Flat Cups	p. 196	CL Series, 1.5 Bellow Cups	p. 200	Fittings for G Series Cups	p. 204
F Series, Flat Cups with Cleats	p. 197	CL Series, 2.5 Bellow Cups	p. 201	**Multiflex, 1.5 Bellow Cups**	**p. 205**
B Series, 1.5 Bellow Cups	p. 198	G Series, 1.5 Bellow Cups with Foam Ring	p. 202	Multiflex, 2.5 Bellow Cups	p. 206
CM Series, 1.5 Baellow Cups	p. 199	G Series, 2.5 Bellow Cups with Foam Ring	p. 203		

Mouldpro Multiflex vacuum cups offer outstanding advantages

- Extremely high wear resistance
- Very high lifting force
- Best static friction qualities
- No sticking tendency
- Elasticity remains unchanged for minus temperatures
- Working temperatures from -20°C to + 80°C
- Antimarking

B Series, Multiflex, 1.5 Bellow Vacuum Cups

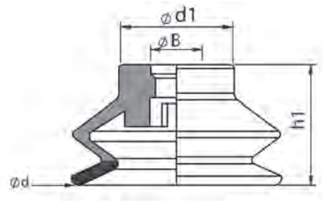

Part No.	d	B	d1	h1	Hardness		Fitting	Fitting	Fitting	Fitting	Weight (g)
B15-10MF	10	3,9	9	16,5	40	5,5	F134				
B15-16MF	16	3,9	9	19	30/60	5,5	F134				
B15-20MF	21	5,2	12	18	30/60	7,6		F250			
B15-30MF	31	6,5	16,8	17	30/60	7,5			F251		
B15-40MF	41	6,3	22,4	22,4	30/60	9,3			F251		
B15-50MF	51	10,5	28	29,2	30/60	14,4				F252	

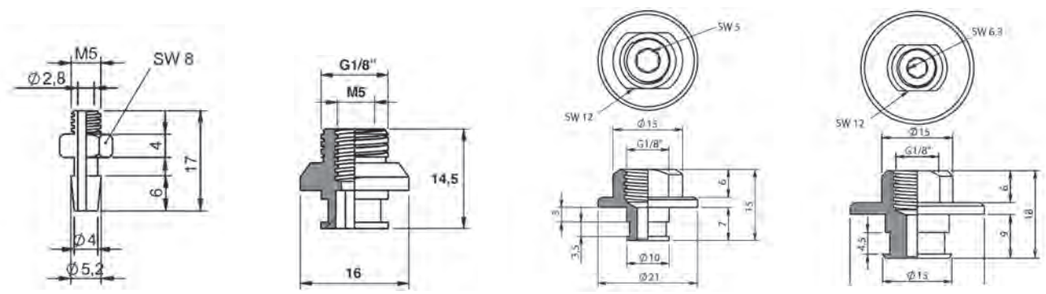

G Series, Flat Cups	p. 196	CL Series, 1.5 Bellow Cups	p. 200	Fittings for G Series Cups	p. 204
F Series, Flat Cups with Cleats	p. 197	CL Series, 2.5 Bellow Cups	p. 201	Multiflex, 1.5 Bellow Cups	p. 205
B Series, 1.5 Bellow Cups	p. 198	G Series, 1.5 Bellow Cups with Foam Ring	p. 202	**Multiflex, 2.5 Bellow Cups**	**p. 206**
CM Series, 1.5 Baellow Cups	p. 199	G Series, 2.5 Bellow Cups with Foam Ring	p. 203		

B Series, Multiflex, 2.5 Bellow Vacuum Cups

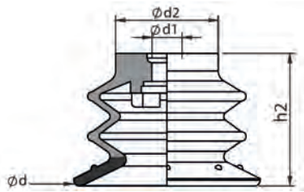

Part No.	d	d1	d2	h2	Hardness		Fitting	Fitting	Fitting	Weight (g)
B25-20MF	20,5	5	12	14,8	30/60	6,5	F250			
B25-25MF	26	5	15,4	18,9	30/60	8	F250			
B25-30MF	30	5	16,5	21,3	30/60	11	F250			
B25-35MF	35	6,5	21	25,63	30/60	11		F251		
B25-40MF	40	6,5	22	28,4	30/60	14,7		F251		
B25-50MF	50	10,5	27,5	35,5	30/60	20			F252	

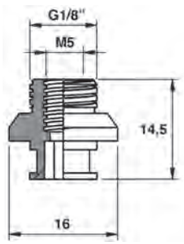

F250

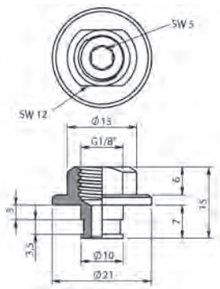

F251

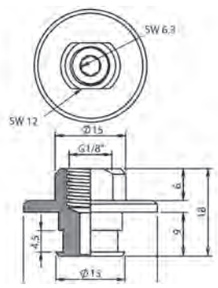

F252

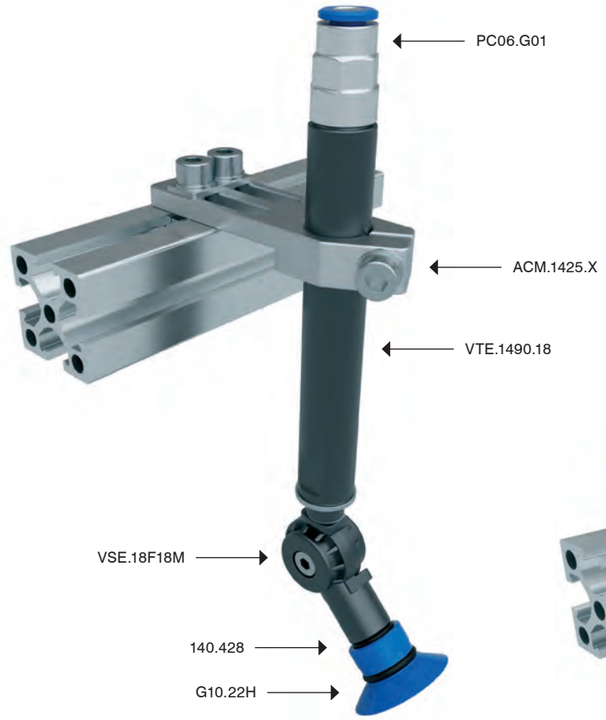

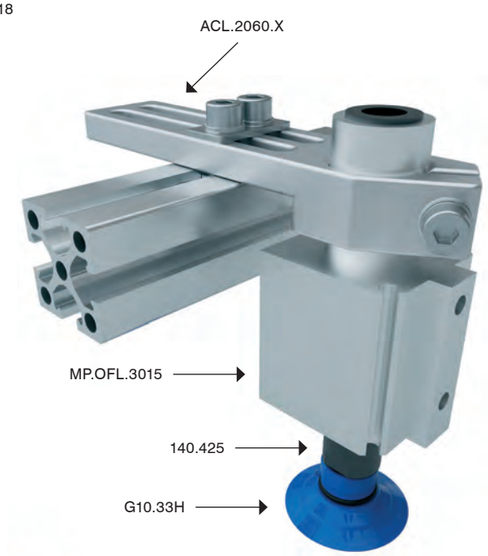

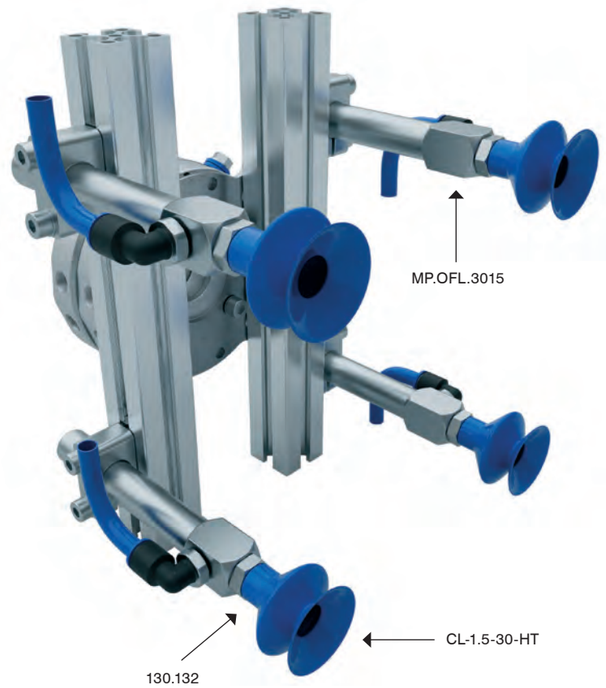

G Series, Flat Cups	p. 196	CL Series, 1.5 Bellow Cups	p. 200	Fittings for G Series Cups	p. 204
F Series, Flat Cups with Cleats	p. 197	CL Series, 2.5 Bellow Cups	p. 201	Multiflex, 1.5 Bellow Cups	p. 205
B Series, 1.5 Bellow Cups	p. 198	G Series, 1.5 Bellow Cups with Foam Ring	p. 202	Multiflex, 2.5 Bellow Cups	p. 206
CM Series, 1.5 Baellow Cups	p. 199	G Series, 2.5 Bellow Cups with Foam Ring	p. 203		

06. Sprue Grippers

M Series, Sprue Grippers	**p. 209**	Compact Sprue Grippers – GZ.AA	p. 215
Mini Sprue Grippers	p. 210	Large Sprue Grippers	p. 216
Small Sprue Grippers	p. 211	Power Grippers	p. 217
Compact Sprue Grippers – 2016	p. 213		

209 M Series, Sprue Grippers

210 Mini Sprue Grippers

211 Small Sprue Grippers

213 Compact Sprue Grippers – 2016

215 Compact Sprue Grippers – GZ.AA

216 Large Sprue Grippers

217 Power Grippers

MSG. – Sprue Grippers M Series

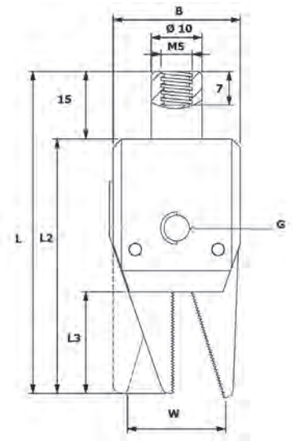

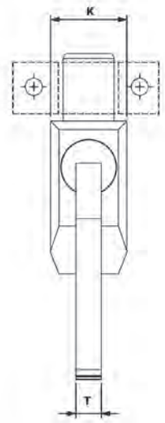

Part No.	W	T	L3	L2	G	L	K	Grip Force	B	Weight (g)
MSG30	6,0	3	12	30	M4	45	8	10 N	15	
MSG40	9,4	4	16	40	M6	55	10	15 N	20	
MSG50	14,0	5	20	50	M6	66	12	23 N	25	
MSG60	16,3	6	24	60	M6	76	14	31 N	30	

Compressed air supply: max. 6 bar.
Operating Temperature : 5° to 70°C

M Series, Sprue Grippers p. 209
Mini Sprue Grippers p. 210
Small Sprue Grippers p. 211
Compact Sprue Grippers – 2016 p. 213
Compact Sprue Grippers – GZ.AA p. 215
Large Sprue Grippers p. 216
Power Grippers p. 217

GZ12-10-8 - Sprue Grippers - Short Series

GZ12-10-8

GZ12-10-8-L

GZ12-10-8-A

GZ12-10-8-LL

GZ12-10-8-S/SN

GZ12-10-8-W

GZ12-10-8-G

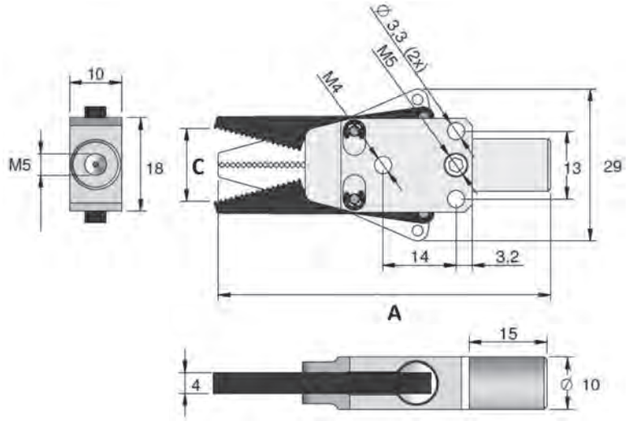

Part No.	C	A	Jaw Type	Sensor	Closing Force (6 bar)	Weight (g)
GZ12-10-8	14	63,9	Serrated	-	19N	30
GZ12-10-8-L	11	59	Diamond Pattern	-	19N	32
GZ12-10-8-A	13	64	Saw tooth	-	19N	30
GZ12-10-8-LL	14	64	Smooth	-	19N	30
GZ12-10-8-W	14	64,1	Extra Wide	-	19N	30
GZ12-10-8-G	14	63,9	Viton rubber Pad	-	19N	30
GZ12-10-8-S	11	61,8	Serrated	PNP	19N	30
GZ12-10-8-SN	11	61,8	Serrated	NPN	19N	30

Compressed air in compliance with ISO 8573-1:2010 [7:4:4].
Maximum Operating Pressure 8 bar.

GZ-SCP – Last Minute Sensor for GZ-10-8

Part No.	Output	Sensor Type	Sensing Distance	Connector	Weight (g)
GZ-SCP-10-8	PNP	Magnetic	0-50mm	M8 4pin	65

GZ-VIT – Insert Pad, Viton

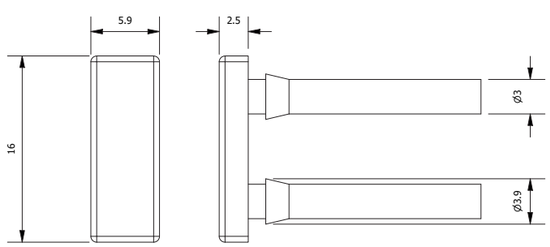

Part No.	Material	REF	Weight (g)
GZ-VIT-4	FKM	GZ12-10-8-G	

M Series, Sprue Grippers p. 209
Mini Sprue Grippers p. 210
Small Sprue Grippers p. 211
Compact Sprue Grippers – 2016 p. 213
Compact Sprue Grippers – GZ.AA p. 215
Large Sprue Grippers p. 216
Power Grippers p. 217

GZ12-10-10 - Sprue Grippers - Standard Series

GZ12-10-10-M

GZ12-10-10-C

GZ12-10-10-CKP/CKN

GZ12-10-10-MC

GZ12-10-10-W

GZ12-10-10-B

GZ12-10-10-L

GZ12-10-10-L90

GZ12-10-10-LL

GZ12-10-10-MF

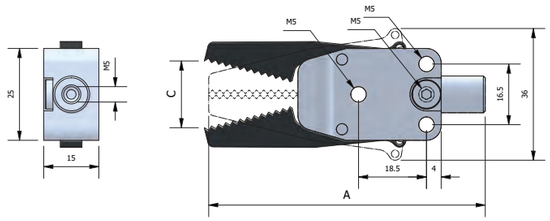

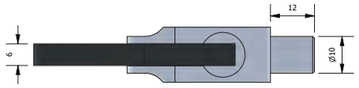

Part No.	C	A	Jaw Type	Sensor	Closing Force (6 bar)	Weight (g)
GZ12-10-10-M	19,5	75	Serrated		30N	40
GZ12-10-10-C	17,9	75	Curved		30N	36
GZ12-10-10-CKP	19	76	Curved	PNP	30N	45
GZ12-10-10-CKN	19	76	Curved	NPN	30N	45
GZ12-10-10-MC	19	75	1 Serated/1 Curved		30N	37
GZ12-10-10-W	20	75,3	Wide		30N	39
GZ12-10-10-B	13	59,3	Custom		30N	32
GZ12-10-10-L	20	76,5	Diamond Pattern		30N	36
GZ12-10-10-L90	19,3	76	Diamond Pattern - 90°		30N	43
GZ12-10-10-LL	19,8	75,3	Smooth		30N	40
GZ12-10-10-MF	19,6	76,5	Serrated Steel		30N	58

Compressed air in compliance with ISO 8573-1:2010 [7:4:4].
Maximum Operating Pressure 8 bar.

GZ-SCP – Last Minute Sensor for GZ-12-10

Part No.	Output	Sensor Type	Sensing Distance	Connector	Weight (g)
GZ-SCP-12-10	PNP	Magnetic	0-50mm	M8 4pin	65

SN. – C-Slot Sensor

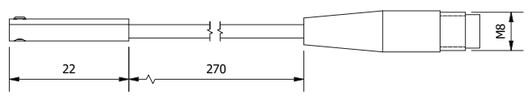

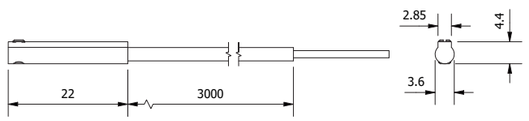

Part No.	Output	Sensor type	Connector	Lead - m	Weight (g)
SN.K5P.M8	PNP	Electronic	M8 3pin	0,3	4
SN.K5N.M8	NPN	Electronic	M8 3pin	0,3	4
SN.K5P.3MW	PNP	Electronic	-	3	4
SN.K5N.3MW	NPN	Electronic	-	3	4

M Series, Sprue Grippers p. 209
Mini Sprue Grippers p. 210
Small Sprue Grippers p. 211
Compact Sprue Grippers – 2016 p. 213
Compact Sprue Grippers – GZ.AA p. 215
Large Sprue Grippers p. 216
Power Grippers p. 217

GZ12-10-10 - Sprue Grippers - Long Series

GZ12-10-10

GZ12-10-10-KP/KN

GZ12-10-10-A

GZ12-10-10-AKP/AKN

GZ12-10-10-G

GZ12-10-10-GKP/GKN

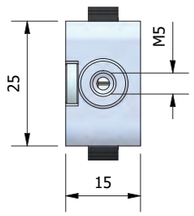

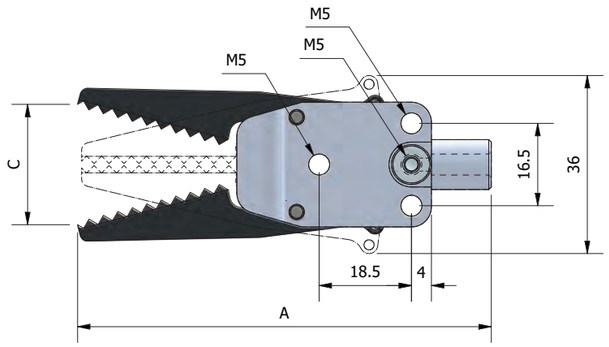

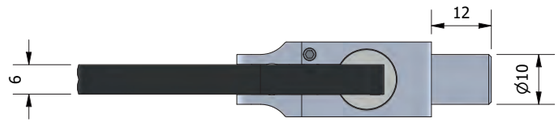

Part No.	C	A	Jaw Type	Sensor	Closing Force (6 bar)	Weight (g)
GZ12-10-10	24	83	Diamond Pattern		30N	40
GZ12-10-10-KP	23	83	Diamond Pattern	PNP	30N	51
GZ12-10-10-KN	23	83	Diamond Pattern	NPN	30N	51
GZ12-10-10-A	21,3	82	Saw Tooth		30N	38
GZ12-10-10-AKP	23	83	Saw Tooth	PNP	30N	51
GZ12-10-10-AKN	23	83	Saw Tooth	NPN	30N	51
GZ12-10-10-G	22,3	82	Viton Rubber Pad		30N	37
GZ12-10-10-GKP	22	83	Viton Rubber Pad	PNP	30N	48
GZ12-10-10-GKN	22	83	Viton Rubber Pad	NPN	30N	48

Compressed air in compliance with ISO 8573-1:2010 [7:4:4].
Maximum Operating Pressure 8 bar.

GZ-VIT – Jaw Insert Pad - Viton

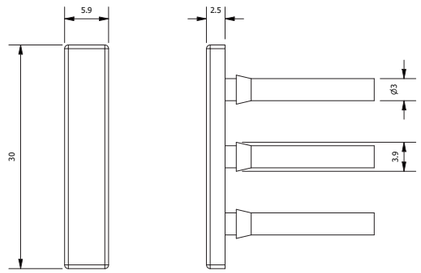

Part No.	Material	REF	Weight (g)
GZ-VIT-6	FKM	GZ-12-10-G	4

M Series, Sprue Grippers p. 209
Mini Sprue Grippers p. 210
Small Sprue Grippers p. 211
Compact Sprue Grippers – 2016 p. 213
Compact Sprue Grippers – GZ.AA p. 215
Large Sprue Grippers p. 216
Power Grippers p. 217

GZ.2016. – Sprue Gripper 20-16, Series

GZ.2016

GZ.2016.KP/KN

GZ.2016ST

GZ.2016ST.KP/KN

GZ.2016V

GZ.2016V.KP/KN

GZ.2016CC

GZ.2016C

GZ.2016C.KP/KN

GZ.2016A

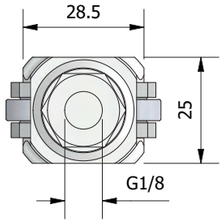

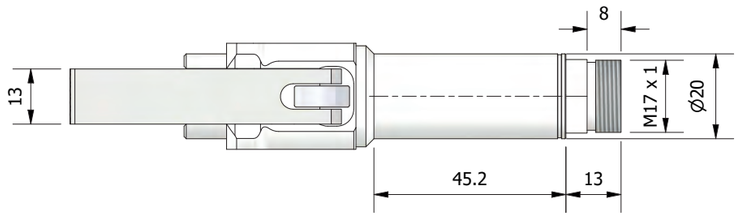

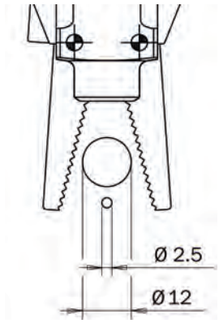

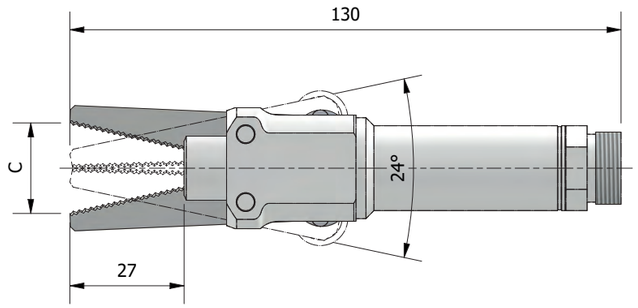

Part No.	Jaw Type	C	Sensor	Closing Force (6 bar)	Weight (g)
GZ.2016	Diamond Pattern	20		65N	163
GZ.2016.KP	Diamond Pattern	22	PNP	65N	160
GZ.2016.KN	Diamond Pattern	22	NPN	65N	160
GZ.2016ST	Saw Tooth	24		65N	157
GZ.2016ST.KP	Saw Tooth	21	PNP	65N	154
GZ.2016ST.KN	Saw Tooth	21	NPN	65N	154
GZ.2016V	Viton Rubber Pads	20		65N	109
GZ.2016V.KP	Viton Rubber Pads	21	PNP	65N	117
GZ.2016V.KN	Viton Rubber Pads	21	NPN	65N	117
GZ.2016CC	Curved	19		65N	163
GZ.2016C	1 Curved/1 Diamond Pattern	19		65N	163
GZ.2016C.KP	1 Curved/1 Diamond Pattern	21	PNP	65N	170
GZ.2016C.KN	1 Curved/1 Diamond Pattern	21	NPN	65N	170
GZ.2016A	Custom			65N	135

Compressed air in compliance with ISO 8573-1:2010 [7:4:4].
Maximum Operating Pressure 8 bar.

M Series, Sprue Grippers p. 209
Mini Sprue Grippers p. 210
Small Sprue Grippers p. 211
Compact Sprue Grippers – 2016 p. 213
Compact Sprue Grippers – GZ.AA p. 215
Large Sprue Grippers p. 216
Power Grippers p. 217

SN. – Sensor

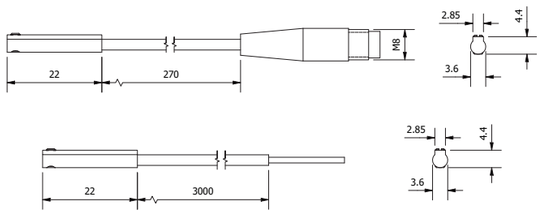

Part No.	Output	Sensor type	Connector	Lead - m	Weight (g)
SN.K5P.M8	PNP	Electronic	M8 3pin	0,3	4
SN.K5N.M8	NPN	Electronic	M8 3pin	0,3	4
SN.K5P.3MW	PNP	Electronic	-	3	4
SN.K5N.3MW	NPN	Electronic	-	3	4

GZ-VIT-8 - Insert Pad, Viton

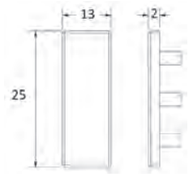

Part No.	Material	REF	Weight (g)
GZ-VIT-8	FKM	GZ.2016V	4

GZ-HNBR-8 - Insert Pad, HNBR

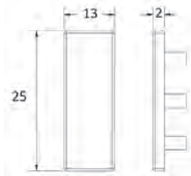

Part No.	Material	Ref	Weight (g)
GZ-HNBR-8	HNBR	GZ.2016.LV	4

GZ2016- – Compact Sprue Gripper

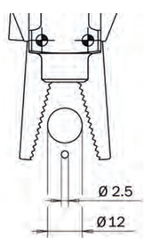

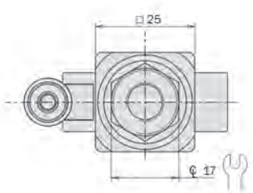

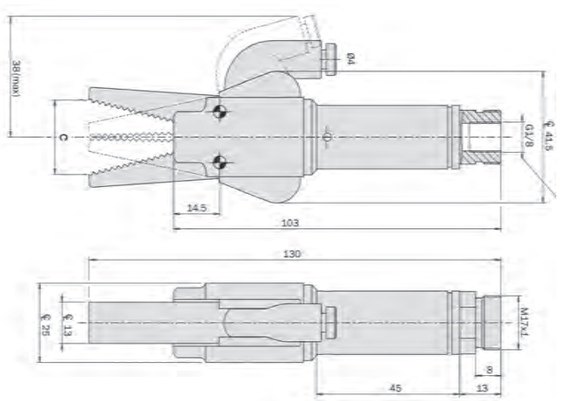

Part No.	Jaw Type	C	Sensor	Closing Force (6 bar)	Weight (g)
GZ.2016.LV	HNBR Pads	20,9	Vacuum	60N	116
GZ.2016.MV	Diamond Pattern	23,5	Vacuum	60N	119

Single Acting.
Gripper has G1/8 air por.
Compressed air in compliance with ISO 8573-1:2010 (7:4:4).
Maximum Operating pressure: 8 bar.
Temperature Range: 5 ÷ 60°C.

M Series, Sprue Grippers p. 209
Mini Sprue Grippers p. 210
Small Sprue Grippers p. 211
Compact Sprue Grippers – 2016 p. 213
Compact Sprue Grippers – GZ.AA p. 215
Large Sprue Grippers p. 216
Power Grippers p. 217

GZ.AA. – Self-Centering Sprue Gripper

GZ.AA24

GZ.AA24.1N/NP

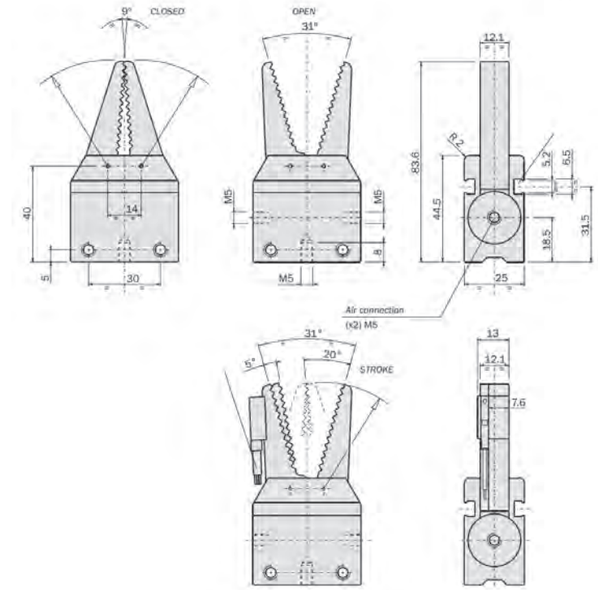

Part No.	Jaw Type	Operation	Sensor	Weight (g)
GZ.AA24	Serrated	Double Acting		115
GZ.AA24.1N	Serrated	Normally Open	NPN	151
GZ.AA24.1P	Serrated	Normally Open	PNP	151

Compressed air in compliance with ISO 8573-1:2010 [7:4:4].
Maximum Operating Pressure 8 bar.

SN. – C-Slot Sensor

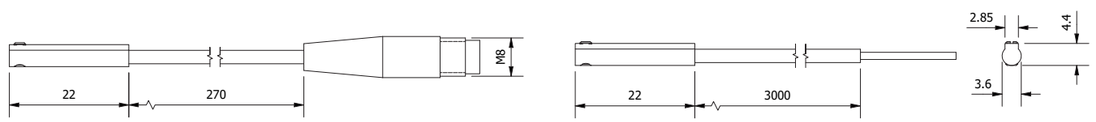

Part No.	Output	Sensor type	Connector	Lead - m	Weight (g)
SN.K5P.M8	PNP	Electronic	M8 3pin	0,3	4
SN.K5N.M8	NPN	Electronic	M8 3pin	0,3	4
SN.K5P.3MW	PNP	Electronic	-	3	4
SN.K5N.3MW	NPN	Electronic	-	3	4

GZ20 – Sprue Grippers GZ20 Series

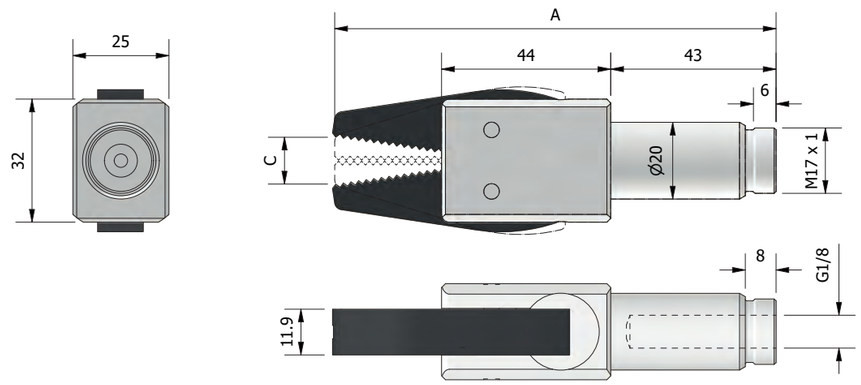

Part No.	Jaw Type	A	C	Sensor Type	Closing Force (6 bar)	Weight (g)
GZ20-10-A	Custom	100	15		90N	114
GZ20-10-E	Curved	115	21		90N	117
GZ20-10-L	Curve-Smooth	115	23		90N	120
GZ20-10-10	Serrated	115	21		90N	121
GZ20-10-10-S	Serrated	115	21	PNP	90N	127
GZ20-10-10-SN	Serrated	115	21	NPN	90N	127
GZ20-10-W-S	Curved	115	21	PNP	90N	123
GZ20-10-W-SN	Curved	115	21	NPN	90N	123

Work principle: Single acting.
Working pressure: 6 bar clean and dry air.
Material: Jaws made of hard-coated Aluminium. Body made of anodized Aluminium.

GZ. – Sensor

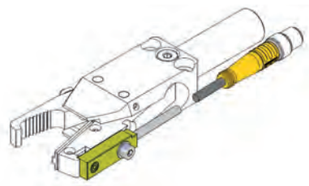

Part No.	Type	Cable length	Connection
GZ20.SM8.PNP	PNP	300	M8
GZ20.SM8.NPN	NPN	300	M8

GSZ.32. – Power Grippers GSZ.32 Series

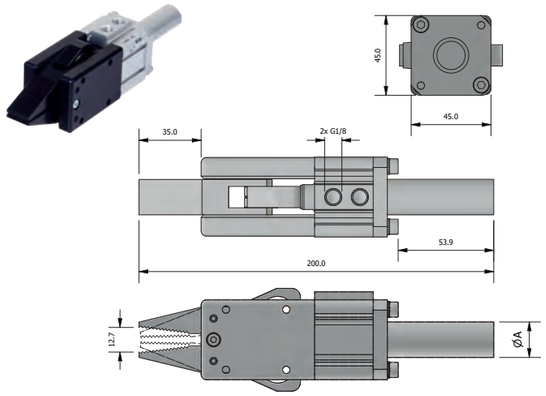

Part No.	A	Jaw Opening - mm	Closing Force (6 bar)	Weight (g)
GSZ.3220	20	12,5	350N	563

GSZ.32. – Power Grippers GSZ.32 Series

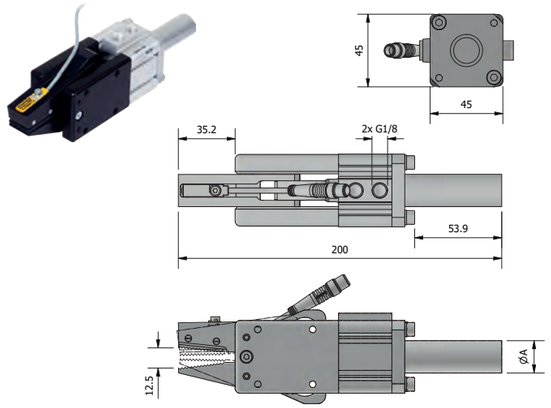

Part No.	A	Jaw Opening - mm	Closing Force (6 bar)	Weight (g)
GSZ.3220-1P	20	12,5	350N	563

GSZ.32 – Power Grippers GSZ.32 Series - Double Stroke

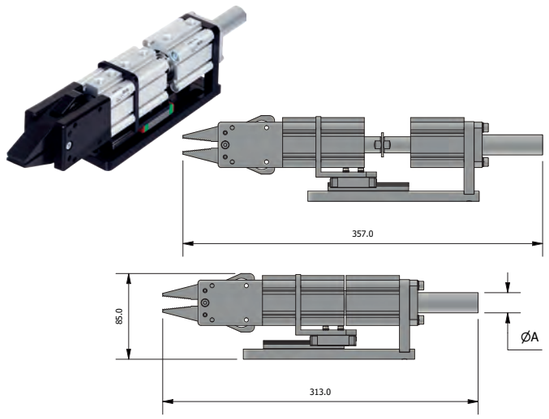

Part No.	A	Jaw Opening - mm	Closing Force (6 bar)	Weight (g)
GSZ.3220.2010	20	12,5	350N	1455

SRB. – Stroke Reducer

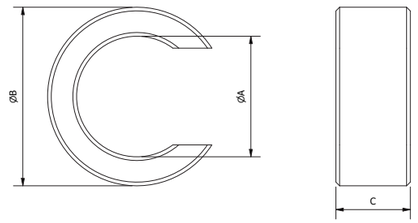

Part No.	A	B	C	Cylinder	Weight (g)
SRB.05.32	16	24	5	32	1
SRB.10.32	16	24	10	32	2
SRB.15.32	16	24	15	32	3

GZ. – Sensor

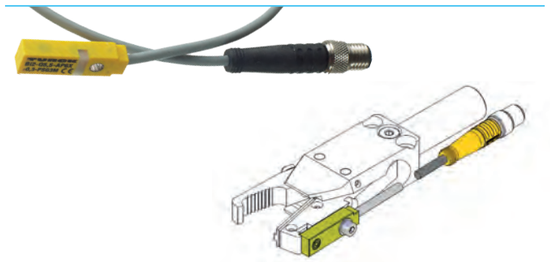

Part No.	Type	Cable length	Connection
GZ20.SM8.PNP	PNP	300	M8
GZ20.SM8.NPN	NPN	300	M8

06. Finger Grippers

219 Finger Grippers – 21°

220 Finger Grippers – 21°, 25°

221 Finger Grippers – 35°, 90°, 95°

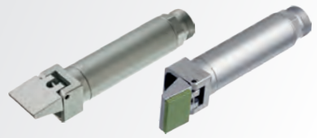

222 Finger Grippers with Stops

224 Stops, Guides & Spares

225 Sensor & Sensor Mounting Brackets

226 90° Tilt Unit

226 Perpendicular Finger Grippers

Finger Grippers – 21°	**p. 219**	Finger Grippers with Stops	p. 222	Pneumatic Tilt Units	p. 226
Finger Grippers – 21°, 25°	p. 220	Stops, Guides & Spares	p. 224	Perpendicular Finger Grippers	p. 226
Finger Grippers – 35°, 90°, 95°	p. 221	Sensor & Sensor Mounting Brackets	p. 225		

GFM. - Finger Grippers 21° Direct Mounting

GFM.2020.H

GFM.2022.N

GFM.2022.S

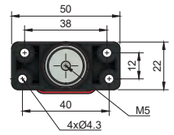

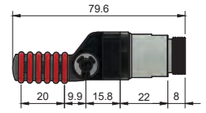

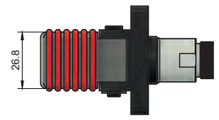

Part No.	Style	Stroke	Max temp of Rings/Pads	Weight (g)
GFM.2020.H	HNBR Pad	21°	150°C	39
GFM.2022.N	Nitrile rings	21°	100°C	42
GFM.2022.S	Silicone Rings	21°	200°C	42

Single-acting.
Soft contact HNBR pads or O-rings in Silicone, NBR.
FDA-H1 food-grade grease.

PAD. – Replacement Pads

PAD.H.20152.5

PAD.H.30223

Part No.	Material	Dimensions mm	Max temp °C
PAD.H.20152.5	HNBR	20x15x2.5	150°
PAD.H.30223	HNBR	30x22x3	150°

KIT-GF. – Replacement O - Rings

KIT-GF20N

KIT-GF20S

Part No.	Material	Max temp °C
KIT-GF20N	Nitrile	100°
KIT-GF20S	Silicon	200°

Finger Grippers – 21° p. 219
Finger Grippers – 21°, 25° p. 220
Finger Grippers – 35°, 90°, 95° p. 221
Finger Grippers with Stops p. 222
Stops, Guides & Spares p. 224
Sensor & Sensor Mounting Brackets p. 225
Pneumatic Tilt Units p. 226
Perpendicular Finger Grippers p. 226

GF. - Finger Grippers 21° - 25°

GF.1425.H GF.2021.H

GF.2021.N GF.2021.S

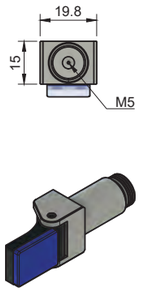

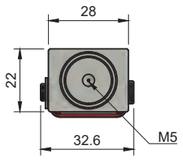

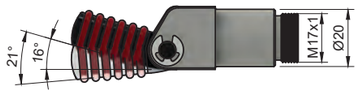

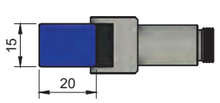

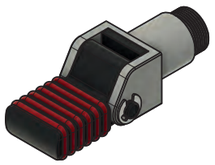

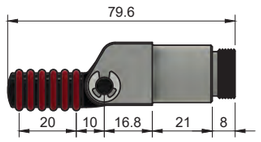

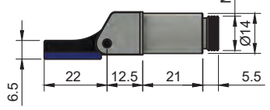

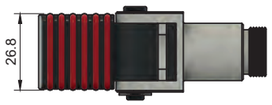

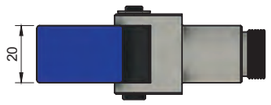

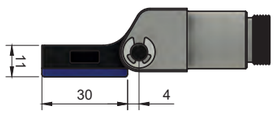

Part No.	Style	Stroke	Max temp of Rings/Pads	Weight (g)
GF.1425.H	HNBR Pads	25°	150°C	17
GF.2021.H	HNBR Pads	21°	150°C	41
GF.2021.N	Nitrile Rings	21°	100°C	45
GF.2021.S	Silicone Rings	21°	200°C	45

Single-acting.
Soft contact HNBR pads or O-rings in Silicone, NBR FDA-H1 food-grade grease.

Finger Grippers – 21° p. 219
Finger Grippers – 21°, 25° p. 220
Finger Grippers – 35°, 90°, 95° p. 221
Finger Grippers with Stops p. 222
Stops, Guides & Spares p. 224
Sensor & Sensor Mounting Brackets p. 225
Pneumatic Tilt Units p. 226
Perpendicular Finger Grippers p. 226

GF. – Finger Gripper

35° 90° 95° 95° V

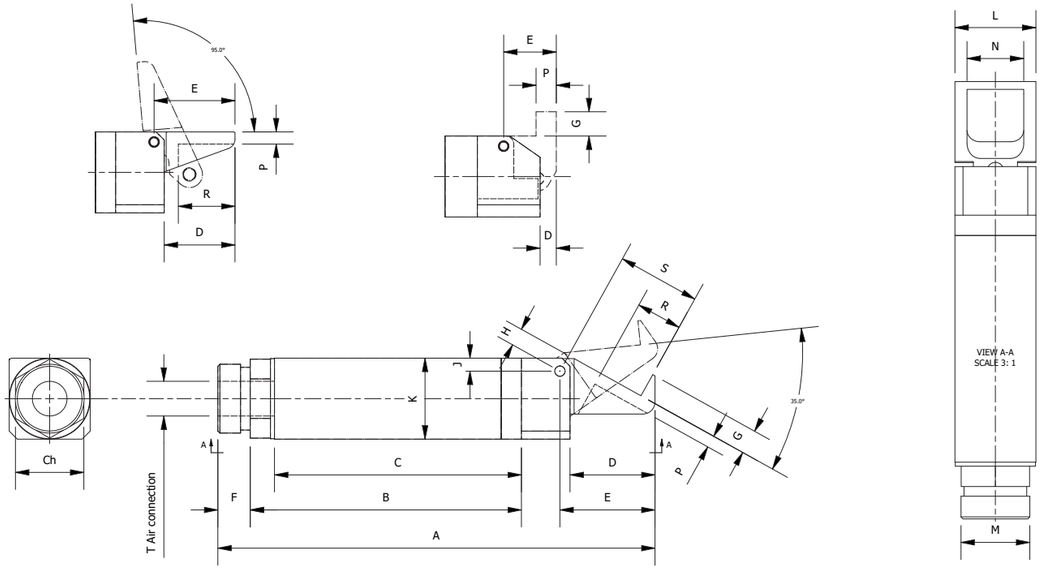

Part No.	Stroke	Grip Force (6 bar)	A	B	C	D	E	F	G	H	J	K	L	M	N	P	R	S	T	CH
GF14-35	35°	26 N	77	47,5	43,5	14	16	5,5	4,5	3,4	2	Ø14	14	M1xX1	10	2	6	13,5	M5	12
GF20-35	35°	100 N	107	66	60	21	23,5	8	6	3,8	2,5	Ø20	20	M17x1	14	3	11,5	20,7	G1/8	17
GF30-35	35°	430 N	156	100	92	30	34	11	8	6	4	Ø30	30	M27x1	22	5	17	30,8	G1/8	27
GF14-90	90°	19 N	69	45,5	41,5	2	8	5,5			2	Ø14	14	M1xX1	10	4			M5	12
GF20-90	90°	70 N	92,5	61	55	2	13	8			2,5	Ø20	20	M17x1	14	5			G1/8	17
GF30-90	90°	300 N	135	91	83	2	20	11			4	Ø30	30	M27x1	22	6			G1/8	27
GF14-95	95°	19 N	75,5	47,5	43,5	12	14	5,5			2	Ø14	14	M1xX1	10	2	9		M5	12
GF20-95	95°	70 N	103,5	66	60	17,5	20	8			2,5	Ø20	20	M17x1	14	3	14		G1/8	17
GF30-95	95°	300 N	148	100	90	25	29	11			4	Ø30	30	M27x1	22	5	21		G1/8	27
GF14-95V	95°	19 N	75,5	47,5	43,5	12	14	5,5			2	Ø14	14	M1xX1	10	2	9		M5	12
GF20-95V	95°	70 N	103,5	66	60	17,5	20	8			2,5	Ø20	20	M17x1	14	3	14		G1/8	17
GF30-95V	95°	300 N	148	100	90	25	29	11			4	Ø30	30	M27x1	22	5	21		G1/8	27

Working Principle: Single acting.
Working pressure: 6 bar clean, dry air.
Material: Silver anodised Aluminium.

Finger Grippers – 21° p. 219
Finger Grippers – 21°, 25° p. 220
Finger Grippers – 35°, 90°, 95° p. 221
Finger Grippers with Stops p. 222
Stops, Guides & Spares p. 224
Sensor & Sensor Mounting Brackets p. 225
Pneumatic Tilt Units p. 226
Perpendicular Finger Grippers p. 226

GFR-95 – 95° Finger Grippers with Stop

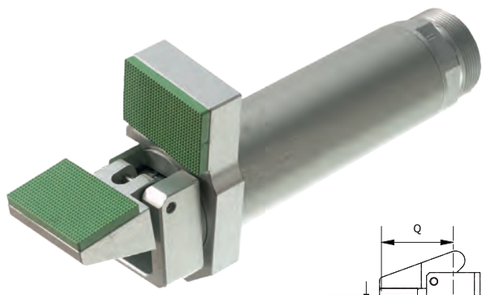

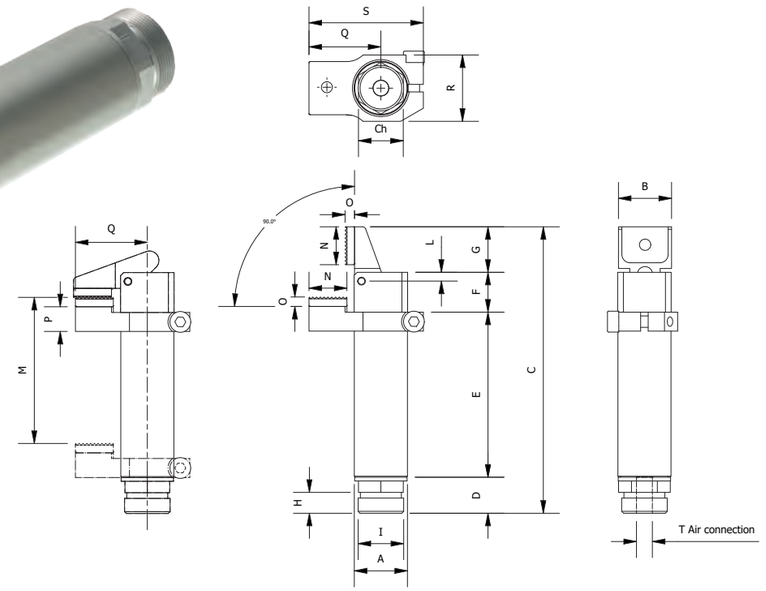

Part No.	Grip force	A	B	C	D	E	F	G	H	I	L	M	N	O	P	Q	R	S	T	CH
GFR1495	19 N	Ø 14	14	75,5	9,5	43,5	10,5	12	5,5	M12X1	2	38,5	10	2,5	6,5	19	17,5	30	M5	12
GFR2095	70 N	Ø 20	20	103,5	14	60	12	17,5	8	M17X1	2,5	52,5	15	2,5	10	27,5	25	43,5	G 1/8	17
GFR3095	300 N	Ø 30	30	148	20	90	15	25	11	M27X1	4	81	20	3	9	40	37	60	G 1/8	27

Work principle: Single acting.
Working pressure: 6 bar clean and dry air.
Material: Silver anodized Aluminium Viton Pads.

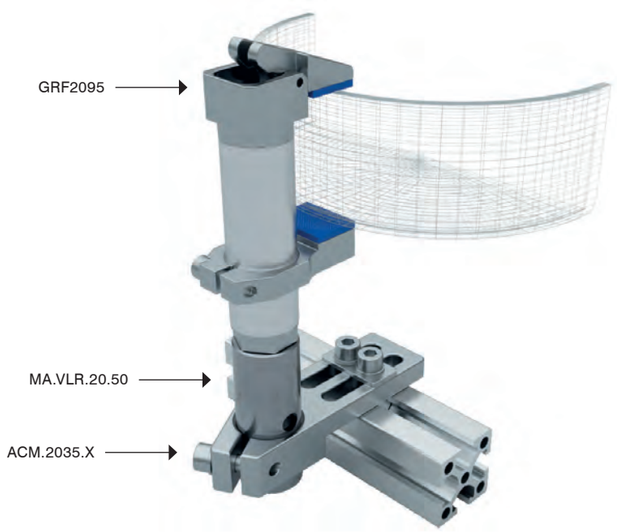

Finger Grippers – 21° p. 219
Finger Grippers – 21°, 25° p. 220
Finger Grippers – 35°, 90°, 95° p. 221
Finger Grippers with Stops p. 222
Stops, Guides & Spares p. 224
Sensor & Sensor Mounting Brackets p. 225
Pneumatic Tilt Units p. 226
Perpendicular Finger Grippers p. 226

GFRX-95V – 95° Finger Grippers with Stop

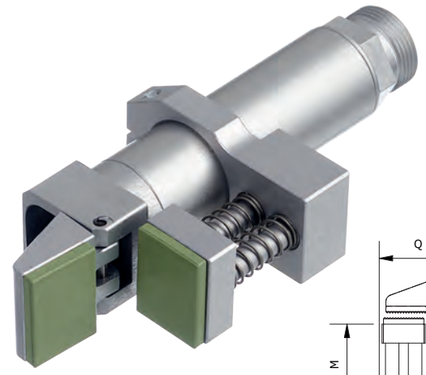

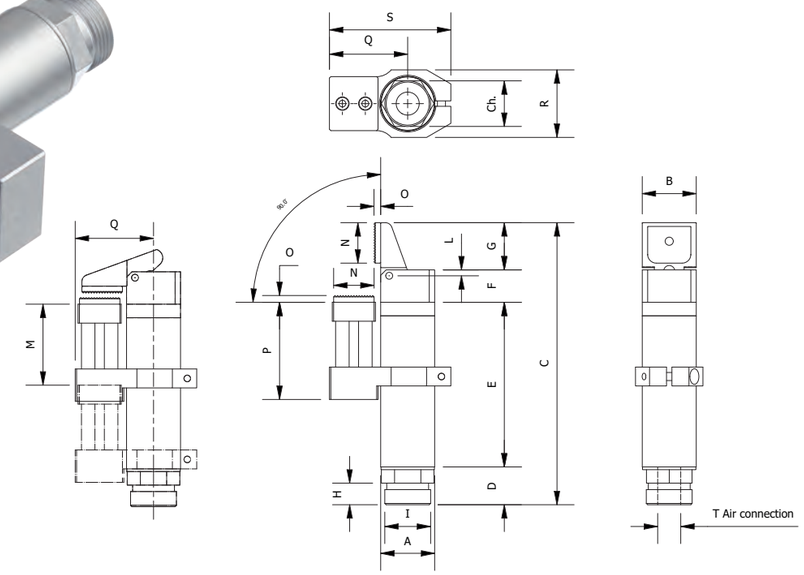

Part No.	Stroke	Grip Force (6 bar)	A	B	C	D	E	F	G	H	I	L	M	N	O	P	Q	R	S	T
GFRX14-95V	95°	19N	Ø14	14	75,5	9,5	43,5	10,5	12	5,5	M12x1	2	16,5	10	2,5	6,5	19	17,5	30	M5
GFRX20-95V	95°	70N	Ø20	20	104.5	14	61	12	17,5	8	M17x1	2,5	41,5	25	2,5	36	29	25	45	G1/8
GFRX30-95V	95°	300N	Ø30	30	148	20	90	15	25	11	M27x1	4	53	20	3	9	40	37	60	G1/8

Working Principle: Single acting.
Working pressure: 6 bar clean, dry air.
Material; Silver anodised Aluminium Viton Pads.

MP.ANF. – Stoppers for Finger Grippers with Soft Pad

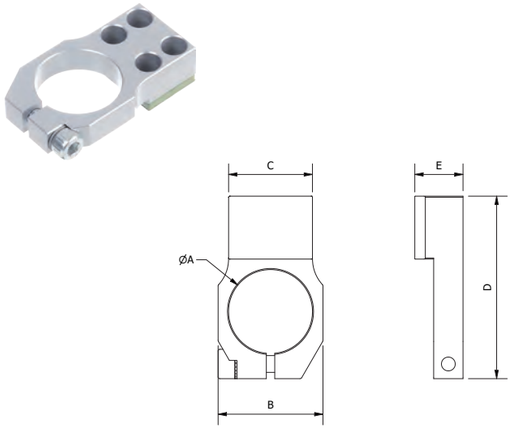

Part No.	A	B	C	D	E	REF	Weight (g)
MP.ANF.14V	Ø14	17.5	14	30.2	9	GF14..	5
MP.ANF.20V	Ø20	25	20	43.5	11.5	GF20..	14
MP.ANF.30V	Ø30	36	30	63	14	GF30..	33

Viton Pad.
Low marking

MP.ANF.VSX – Stoppers for Finger Grippers

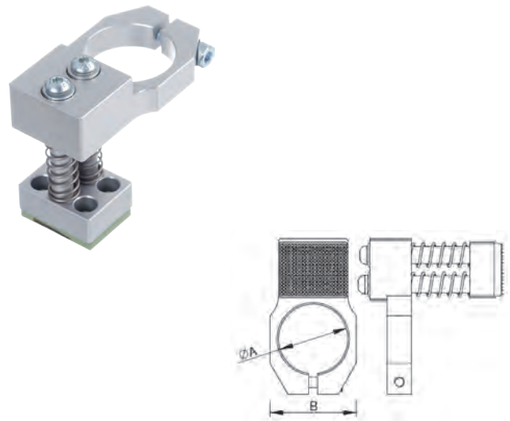

Part No.	A	B	REF	Weight (g)
MP.ANF.14.VSX	Ø14	20	GF14..	15
MP.ANF.20.VSX	Ø20	25	GF20..	20
MP.ANF.30.VSX	Ø30	37	GF30..	50

Viton Pad.
Low marking.

GFR. – Insert Pad Viton

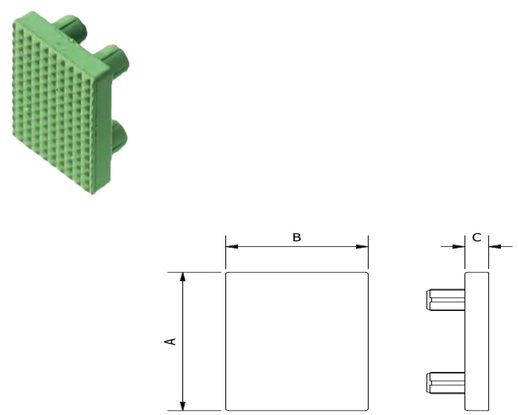

Part No.	A	B	C	REF	Weight (g)
GFR149508V	14	10	2.5	GF14..	1
GFR209508V	20	15	2.5	GF20..	2
GFR309508V	30	20	3	GF30..	3

Low marking.
UV resistant.
Maximum Temp: 210° (<30 sec.).

MP.ANS. – Stoppers for Finger Grippers

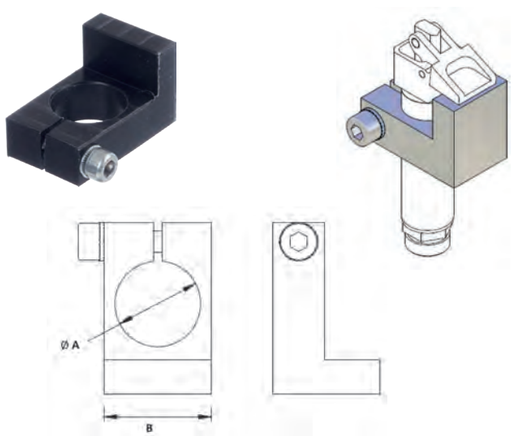

Part No.	A	B	REF	Weight (g)
MP.ANS.14	Ø14	20	GF14..	17
MP.ANS.20	Ø20	25	GF20..	21
MP.ANS.30	Ø30	35	GF30..	30

Material: POM

MP.ZTS. – Finger Gripper Guide

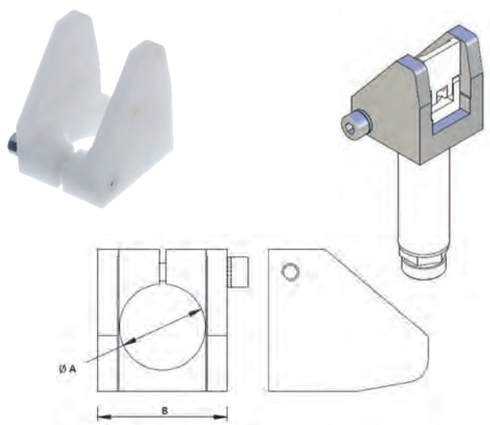

Part No.	A	B	REF	Weight (g)
MP.ZTS.14	Ø14	20	GF14..	15
MP.ZTS.20	Ø20	25	GF20..	20
MP.ZTS.30	Ø30	35	GF30..	60

Material: POM

SN. – C-Slot Sensor

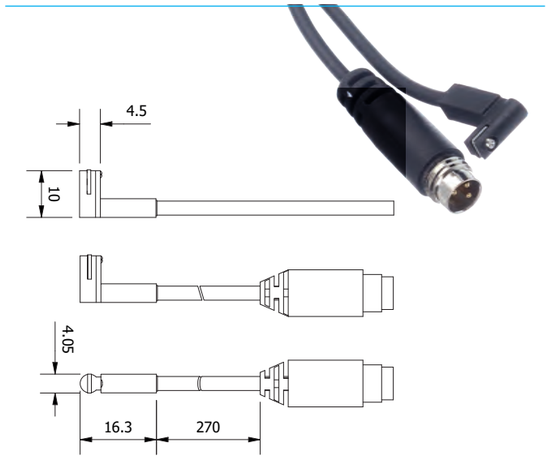

Part No.	Output	Sensor type	Connector	Lead - m	Weight (g)
SN.K3P.M8	PNP	Electronic	M8 3pin	0,3	4
SN.K3N.M8	NPN	Electronic	M8 3pin	0,3	4
SN.K3P.3MW	PNP	Electronic		3	4
SN.K3N.3MW	NPN	Electronic		3	4

SMB. – Sensor Mounting Brackets

Part No.	A	REF	Sensor	Weight (g)
SMB.14	Ø14	GF14..	SN.K3	
SMB.20	Ø20	GF20..	SN.K3	
SMB.30	Ø30	GF30..	SN.K3	
SMB.14.P	Ø14	GF14..	SN.K3	
SMB.20.P	Ø20	GF20..	SN.K3	
SMB.30.P	Ø30	GF30..	SN.K3	
SMB.14.L	Ø14	GF14..	SN.K3	
SMB.20.L	Ø20	GF20..	SN.K3	
SMB.30.L	Ø30	GF30..	SN.K3	

Finger Grippers – 21° p. 219
Finger Grippers – 21°, 25° p. 220
Finger Grippers – 35°, 90°, 95° p. 221
Finger Grippers with Stops p. 222
Stops, Guides & Spares p. 224
Sensor & Sensor Mounting Brackets p. 225
Pneumatic Tilt Units p. 226
Perpendicular Finger Grippers p. 226

GFT. – Pnuematic Tilt Unit

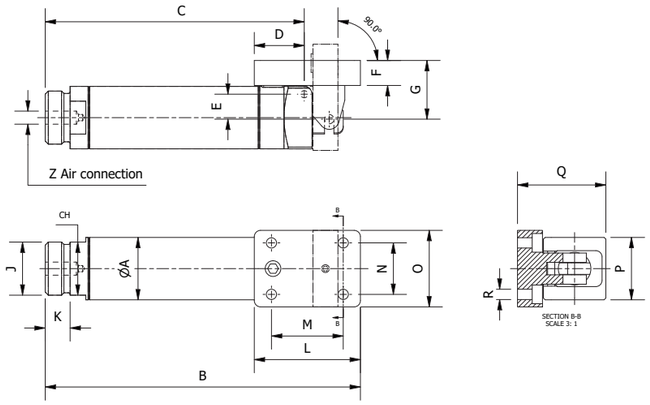

Part No.	A	B	C	D	E	F	G	J	K	L	M	N	O	P	Q	R	CH	Z	Weight (g)
GFT.t	20	101	83	16	8	8	18.8	M17x1	8	34	23	16.5	24.5	20	28.3	3.3	17	M5	75
GFT.3090	30	146.5	119	21.6	11	10	25.5	M27x1	11	49	25	25	37	30	40.3	5.3	27	G1/8	270

Single-acting.
Tilt angle: 90°.
Pressure range: 2.5-8 bar.

GFP. – Perpendicular Finger Gripper

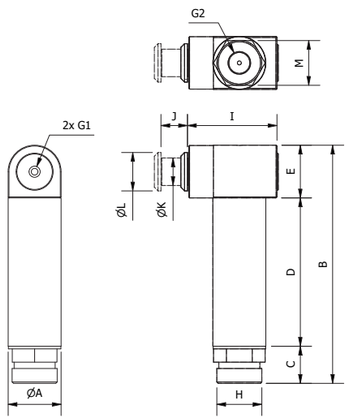

Part No.	A	Stroke	B	C	D	E	G1	G2	H	I	J	K	L	M	Grip force	Weight
GFP.1406	14	6mm	65	9.5	41.5	14	M5	M5	M12X1	31.5	6	8	10	CH12	63N	47
GFP.2010	20	10mm	89.5	14	56	20	M5	G1/8	M17X1	34	10	10.5	14.5	CH17	115N	115
GFP.3015	30	15mm	131	19	82	30	G1/8	G1/8	M27X1	49	15	14	20	CH27	230N	380

Working Principle: Single acting.
Working pressure: 6 bar clean, dry air.
Material; Silver anodised Aluminium.
Through hole for vacuum to a cup.
Viton pad for soft contact.

End of Arm Tooling | Finger Grippers *90° Tilt Units / Perpendicular Finger Grippers*

Finger Grippers – 21° p. 219
Finger Grippers – 21°, 25° p. 220
Finger Grippers – 35°, 90°, 95° p. 221
Finger Grippers with Stops p. 222
Stops, Guides & Spares p. 224
Sensor & Sensor Mounting Brackets p. 225
Pneumatic Tilt Units p. 226
Perpendicular Finger Grippers p. 226

PAD.V. – Viton Pad for Perpendicular Finger Gripper

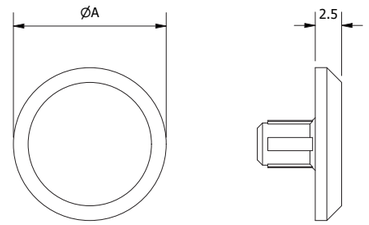

Part No.	A	REF	Weight (g)
PAD.V.D9.5X2.5	10	GPF.1406	1
PAD.V.D14.5X2.5	14,5	GPF.2010	1
PAD.V.D19.5X3.0	20	GPF.3015	4

Viton Pad.
Low marking.

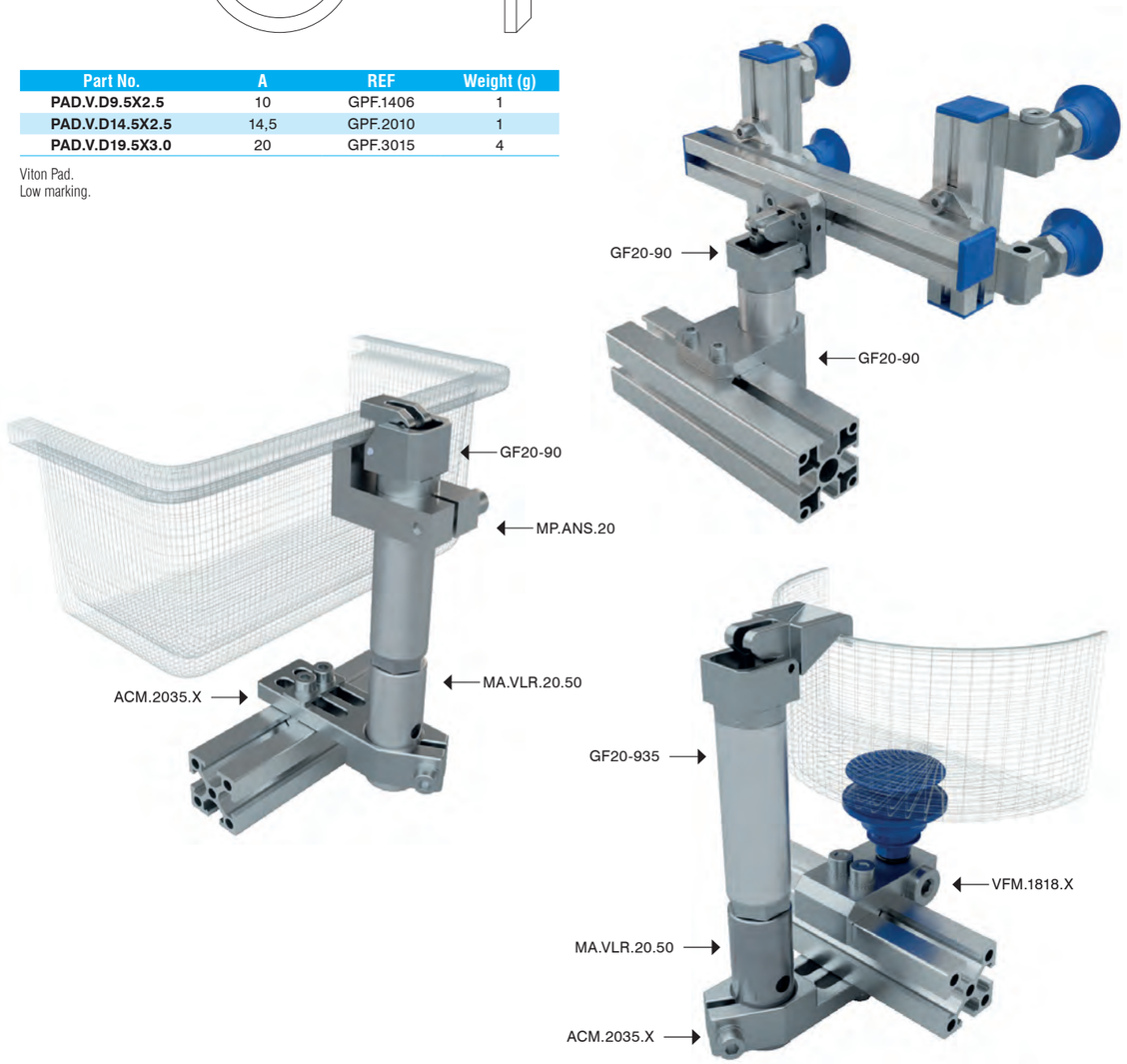

Compact Parallel Grippers p. 229
Parallel Grippers p. 231
Jaws for Parallel Grippers p. 232
Angular Grippers p. 233

229 Compact Parallel Grippers

231 Parallel Grippers

232 Jaws for Parallel Grippers

233 Angular Grippers

MP.SGP - Compact Parallel Gripper

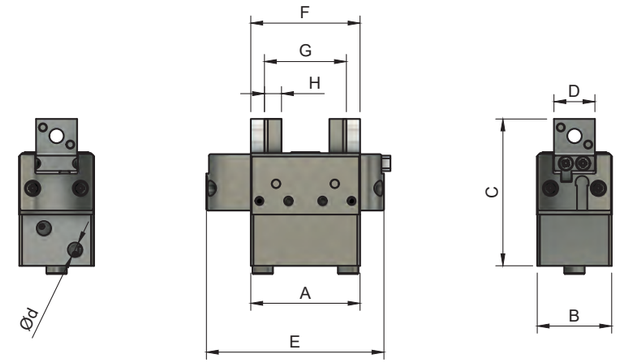

Part No.	Stroke	Closing force at 6 bar	Opening force at 6 bar	Weight (g)
MP.SGP-20S	4mm	40N	46N	33
MP.SGP-25S	6mm	94N	104N	43
MP.SGP-32S	8mm	120N	134N	86
MP.SGP-40S	12mm	146N	160N	170

Part No.	A	B	C	D	Ød	E	F	G	H
MP.SGP-20S	20	15,8	32	9	M3	36,5	20	16	3,5
MP.SGP-25S	26	17,8	34	10	M3	42,5	25	19	4
MP.SGP-32S	32	21,8	43	12	M3	52	32	24	5
MP.SGP-40S	40	25,8	51	16	M3	62	40	28	6

Double Acting.
Compact Size.
Maximum Operating pressure: 8 bar.
Temperature Range: 5 ÷ 60°C.

The operating position can be checked by one 3 - outputs programmable sensor (not included), detecting the position of the magnet on the right jaw.

The Detected positions can be adjusted by a teaching procedure, so that 3 digital outputs can be:

Output 1 - totally closed gripper (1)
Output 2 - gripped part intermediate position (2)
Output 3 - totally open gripper (3)

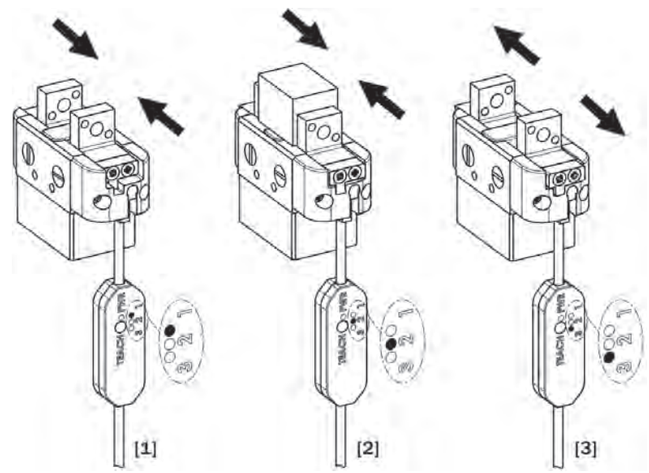

PRO.SN-HS – Programmable Magnetic Sensor for MP.SGP-

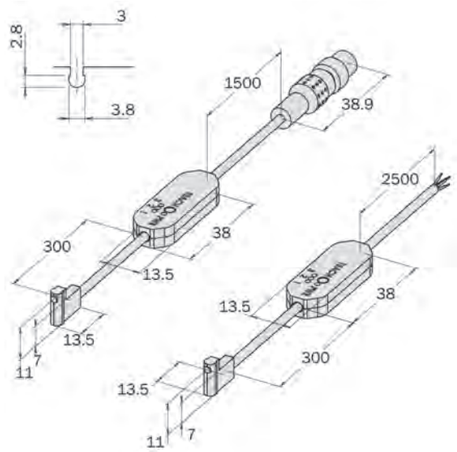

Part No.	Output	Sensor Type	Connector	Lead - m	Ref.	Weight (g)
PRO.SN3N215HS-G	PNP	Magnetoresistive NO/NC	M8 -3 pin	0,3	MP.SGP	70
PRO.SN3M215HS-G	NPN	Magnetoresistive NO/NC	M8 -3 pin	0,3	MP.SGP	70
PRO.SN4N225HS-G	PNP	Magnetoresistive NO/NC		2,5	MP.SGP	70
PRO.SN4M225HS-G	NPN	Magnetoresistive NO/NC		2,5	MP.SGP	70

Programmable GMP magnetoresistive sensors.
3 independent digital outputs.
Each programmable output in NO or NC logic.

The sensor's remote programming circuit has a button for the configuration and programming of outputs. Following a simple procedure, the user can configure each output as normally open (NO - yellow LED) or normally closed (NC - green LED) and store the swithcing point (separate for each output).

Wiring Diagram

PNP

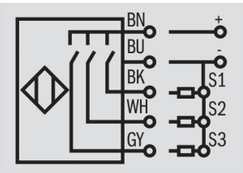

NPN

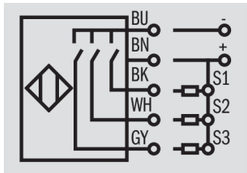

Connections

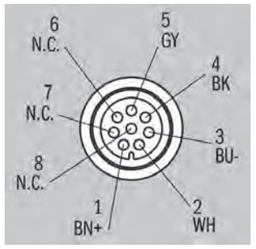

Brown (BN +); Blue (BU -); Black (BK OUT1)
White (WH OUT 2); Grey (GY OUT 3); Not connected N.C.

PG. – Parallel Gripper

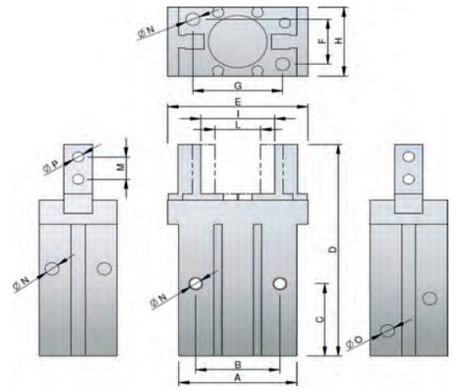

Part No.	Bore Size	A	B	C	D	E	F	G	H	I open	L closed	Stroke	M	N	O	P	Force (N) Open/Close	Weight (g)
PG-10	10	23	16	23	57	30	12	18	16,5	15,5	11,5	4	5,7	M3	M3	M2.5	22/34	56
PG-10NO	10	23	16	23	57	30	12	18	16,5	15,5	11,5	4	5,7	M3	M3	M2.5	14/	57
PG-10L	10	23	16	25	57	35	12	18	16,5	20,3	11	8	5,7	M3	M3	M2.5	22/34	64
PG-16	16	30,5	24	24,5	67,3	39	15	22	23,5	21	15	6	7	M4	M5	M3	68/90	124
PG-16NO	16	30,5	24	24,5	67,3	39	15	22	23,5	21	15	6	7	M4	M5	M3	54/	125
PG-16L	16	30,5	24	31	70	47	15	22	23,5	28	14,7	12	7	M4	M5	M3	68/90	146
PG-20	20	42	30	29	85	53	18	32	27,5	26,5	16,5	10	9	M5	M5	M4	90/132	236
PG-20NO	20	42	30	29	85	53	18	32	27,5	26,5	16,5	10	9	M5	M5	M4	70/	238
PG-20L	20	42	30	36	90	62	18	32	27,5	33,5	16,1	18	9	M5	M5	M4	84/132	273
PG-25	25	52	36	30	103	71	22	40	33,5	33,5	19,5	14	12	M6	M5	M5	138/204	428
PG-25NO	25	52	36	30	103	71	22	40	33,5	33,5	19,5	14	12	M6	M5	M5	110/	430
PG-25L	25	52	36	40	106	75	22	40	33,5	42,6	19,3	22	12	M6	M5	M5	130/208	489
PG-32	32	60	46	49	113	106	26	46	40	48	26	22	14	M6	M5	M6	320/390	729

SN.DMSG. – T-Slot Sensor

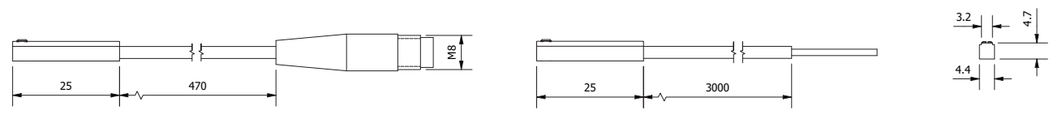

Part No.	Output	Sensor type	Connector	Lead m	Ref.	Weight (g)
SN.DMSGP.M8	PNP	Magnetic	M8 3pin	0.5	PG/AG/CCTQ/CCAQ	4
SN.DMSGN.M8	NPN	Magnetic	M8 3pin	0.5	PG/AG/CCTQ/CCAQ	4
SN.DMSGP.3M	PNP	Magnetic		3	PG/AG/CCTQ/CCAQ	4
SN.DMSGN.3M	NPN	Magnetic		3	PG/AG/CCTQ/CCAQ	4

SN.DMSH. – C-Slot Sensor

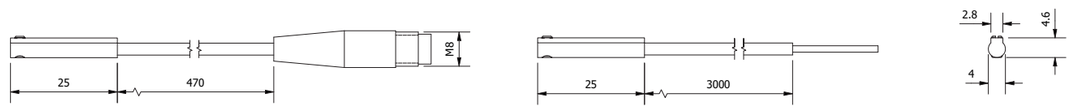

Part No.	Output	Sensor type	Connector	Lead m	Ref.	Weight (g)
SN.DMSHPM8	PNP	Electronic	M8 3pin	0.5	PG	4
SN.DMSHNM8	NPN	Electronic	M8 3pin	0.5	PG	4
SN.DMSHP3M	PNP	Electronic		3	PG	4
SN.DMSHN3M	NPN	Electronic		3	PG	4

MA.KB. – Jaws for Parallel Gripper PG (complete)

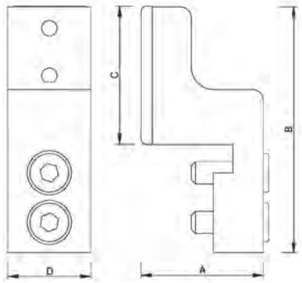

Part No.	Insert	A	B	C	D	Gripper Ref.	Weight (g)
MA.KB.10	FKM-10	15,5	27	14	10	PG-10	14
MA.KB.16	FKM-16	18,5	35	20	15	PG-16	28
MA.KB.20	FKM-20	22	44,5	25	15	PG-20	41
MA.KB.25	FKM-25	29	55	25	20	PG-25	73
MA.KB.32	FKM-32	36	65,5	36,5	25	PG-32	166

Extremely leight weight (Material Aluminium).

FKM – Insert Pad Viton

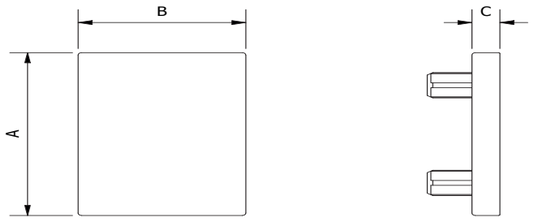

Part No.	Colour	A	B	C	Jaw Ref.	Weight (g)
FKM-10		14	10	2.5	PG-10	1
FKM-16		20	15	2.5	PG-16	2
FKM-20		25	13	2	PG-20	1
FKM-25		25	13	2	PG-25	1
FKM-32		30	20	3	PG-32	3

FKM = Viton (flur=oroelastomer).

GA – Mounting Bracket for Grippers PG, AG

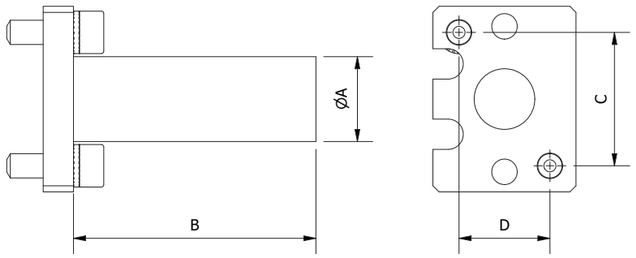

Part No.	A	B	C	D	REF	Weight (g)
GA-10	10	30	18	12	PG-10	11
GA-16	14	40	22	15	PG-16	21
GA-20	20	50	32	18	PG-20	38
GA-25	20	50	40	22	PG-25	55
GA-32	20	50	46	26	PG-32	102

AG – Angular Gripper

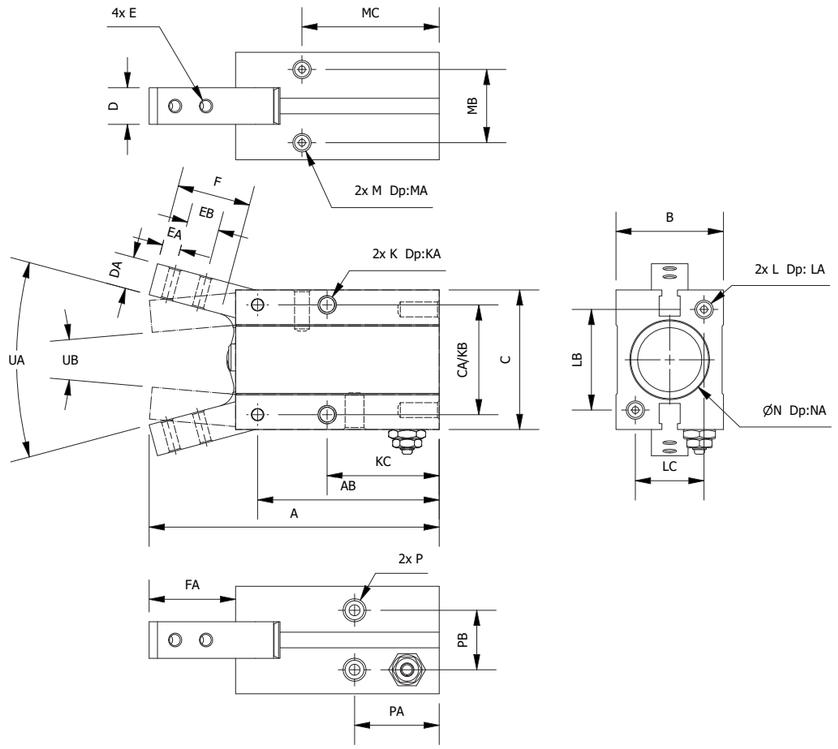

Part No.	Bore Size	A	AB	B	C	CA	D	DA	E	EA	EB	F	FA	K	KA	KB	KC	L
AG-10-D	10	52,5	38,5	16,5	23	14	6,4	4	M2.5	3	5,7	12	14,5	M3x0.5	5	16	23	M3x0.5
AG-16-D	16	62,5	44,5	23,5	30,5	24	8	7	M3	4	7	16	19	M4x0.7	7	24	24,5	M4x0.7
AG-20-D	20	78	55	27,5	42	30	10	8	M4	5	9	20	23,5	M5x0.8	8	30	29	M5x0.8
AG-25-D	25	92	60,5	33,5	52	36	12	10	M5	8	12	27	33	M6x1.0	10	36	30	M6x1.0
AG-32-D	32	96,5	68	440	60	42	18	10	M6	6	14	27	29,5	M6x1.0	10	44	37,5	M6x1.0

Part No.	Bore Size	LA	LB	LC	M	MA	MB	MC	N	NA	P	PA	PB	UA(Open)	UB(Closed)	Weight (g)
AG-10-D	10	6	18	12	M3x0.5	6	11,5	27	11	1,5	M3x0.5	19	10	30°	10°	36
AG-16-D	16	8	22	15	M4x0.7	8	16	30	17	1,5	M5x0.8	10,5	13	30°	10°	59
AG-20-D	20	10	32	18	M5x0.8	10	18,5	35	21	1,5	M5x0.8	22	15	30°	10°	64
AG-25-D	25	12	40	22	M6x1.0	10	22	36,5	26	1,5	M5x0.8	23,5	20	30°	10°	155
AG-32-D	32	12	46	26	M6x1.0	10	26	30	34	2	M5x0.8	31	24	30°	10°	161

SN.DMSG. – T-Slot Sensor

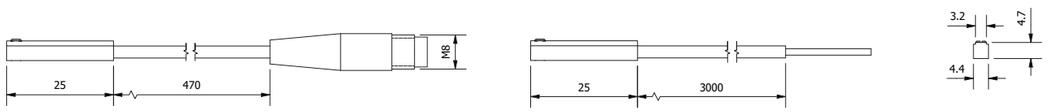

Part No.	Output	Sensor type	Connector	Lead m	REF	Weight (g)
SN.DMSGP.M8	PNP	Magnetic	M8 3pin	0.5	PG/AG/CCTQ/CCAQ	4
SN.DMSGN.M8	NPN	Magnetic	M8 3pin	0.5	PG/AG/CCTQ/CCAQ	4
SN.DMSGP.3M	PNP	Magnetic		3	PG/AG/CCTQ/CCAQ	4
SN.DMSGN.3M	NPN	Magnetic		3	PG/AG/CCTQ/CCAQ	4

Expansion Grippers p. 235
Dock & Lock Grippers p. 239

235 Expansion Grippers

239 Dock & Lock Grippers

IGU - Expansion Grippers

Dimensions (mm)

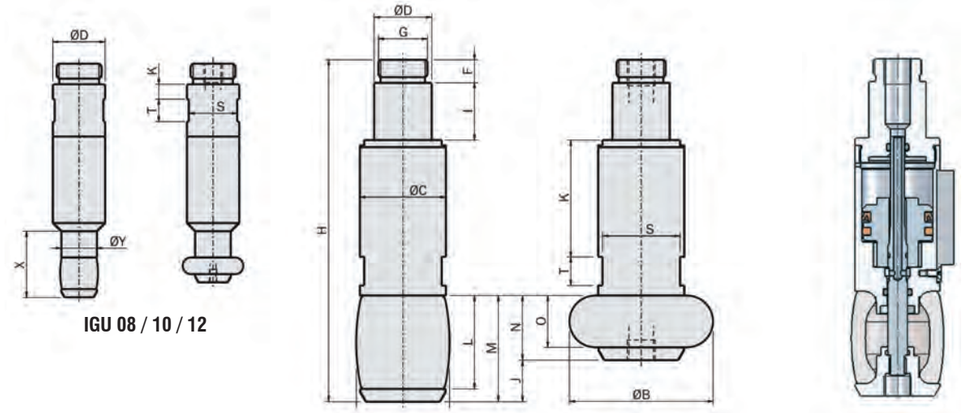

IGU 08 / 10 / 12

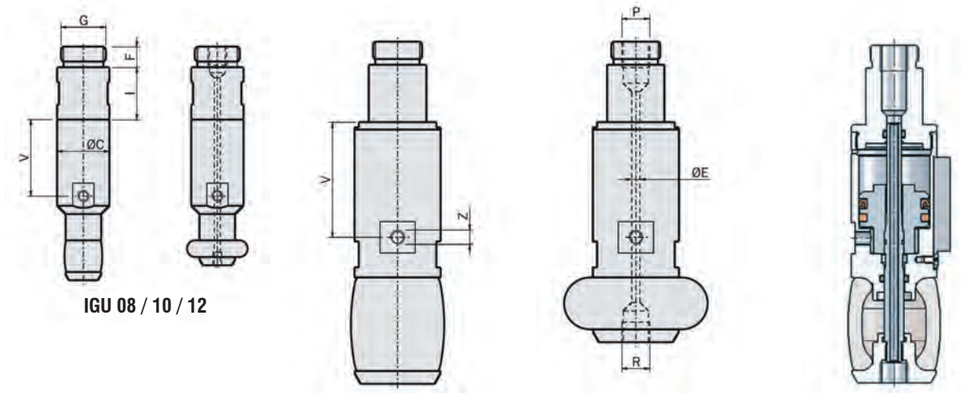

IGU 08 / 10 / 12

Part No.	ØA	ØB	ØC	ØD	ØE	F	G	H	I	J	K	L	M	N	O	P	R	S	T	V	Z	X	ØY	Weight (g)
IGU08E	8	11	14	14	1,1	5,5	M12x1	61,5	14	3,5	4	7	9,2	5,7	3,5	M5	M2	13	6	20	M3	16,3	7,6	16
IGU10E	10,5	13,5	14	14	1,1	5,5	M12x1	62,5	14	4	4	8,5	10,7	6,7	4,5	M5	M2	13	6	20,5	M3	17,7	9,5	17
IGU12E	13	17	14	14	1,3	5,5	M12x1	65	14	5,5	4	10,5	13	7,5	5	M5	M3	13	6	21,5	M3	20	11,8	18
IGU14E	15	19,5	14	14	1,3	5,5	M12x1	68,5	14	7	24,2	13	15,8	8,8	6	M5	M3	13	6	23,2	M3			20
IGU16E	18	21,5	14	14	1,3	5,5	M12x1	68,5	14	7	24,2	13	15,8	8,8	6	M5	M3	13	6	23,2	M3			20
IGU18E	19,5	24,5	18	14	1,3	5,5	M12x1	78	14	7,5	29	16,5	19,5	12	9	M5	M3	16	7	28	M5			35
IGU20E	22,5	26,5	18	14	1,3	5,5	M12x1	78	14	7,5	29	16,5	19,5	12	9	M5	M3	16	7	28	M5			35
IGU22E	24	31,5	21,5	14	1,8	5,5	M12x1	86,5	14	10	31,8	21	24,2	14,2	11	M5	M3	20	8	31,5	M5			50
IGU27E	28	36	25	20	2,5	8	M17x1	108	20	12	37,5	26	30	18	14	M5	M5	22	9	37	M5			100
IGU33E	34	44	30	20	2,8	8	M17x1	119	20	14,5	40,5	32,5	37	22,5	18	G1/8	G1/8	28	10	40	M5			130
IGU41E	42	54	40	30	4,5	11	M27x1	147	30	15,5	45	39,5	45	29,5	24	G1/8	G1/8	36	12	45	M5			30
IGU47E	50	58	40	30	4,5	11	M27x1	147	30	15,5	45	39,5	45	29,5	24	G1/8	G1/8	36	12	45	M5			300
IGU51E	54	68	50	30	5	11	M27x1	169	30	18	54	48	55	37	30	G1/8	G1/8	45	14	56,5	G1/8			500
IGU63E	66	84	60	30	5	11	M27x1	194	30	25	62	61	70	45	36	G1/8	G1/8	54	16	64,5	G1/8			785

Downward movement (IGD - on request), or upward movement (IGU).
The elastic part can be in Silicone or EPDM.
Grip diameters from 8 to 85 mm.
Optional proximity magnetic sensors.
Use standard Ø14, 20 and 30mm clamps.
Has a central through hole which can be used to blow compressed air, or to provide vacuum, with the purpose of cooling a part, or checking sealing.

IGU - Expansion Grippers

ID expansion grippers series IGU

- New concept for innovative air hand.s
- Upward movement.
- Central trough holefor compressed airor vacuum.
- The elastic part can be in Silicone or EPDM.
- Grip diameters from 8mm to 85mm.
- Optional nose cone for centering.
- Optional proximity magnetic sensors.
- Several mounting accessories.

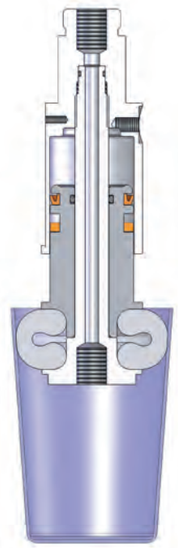

Grip diameters

- The gripper size is indicated in the gripper code with nominal diameter of the elastic part.
- Each model can work in a diameter range between a minium and maximum valve.

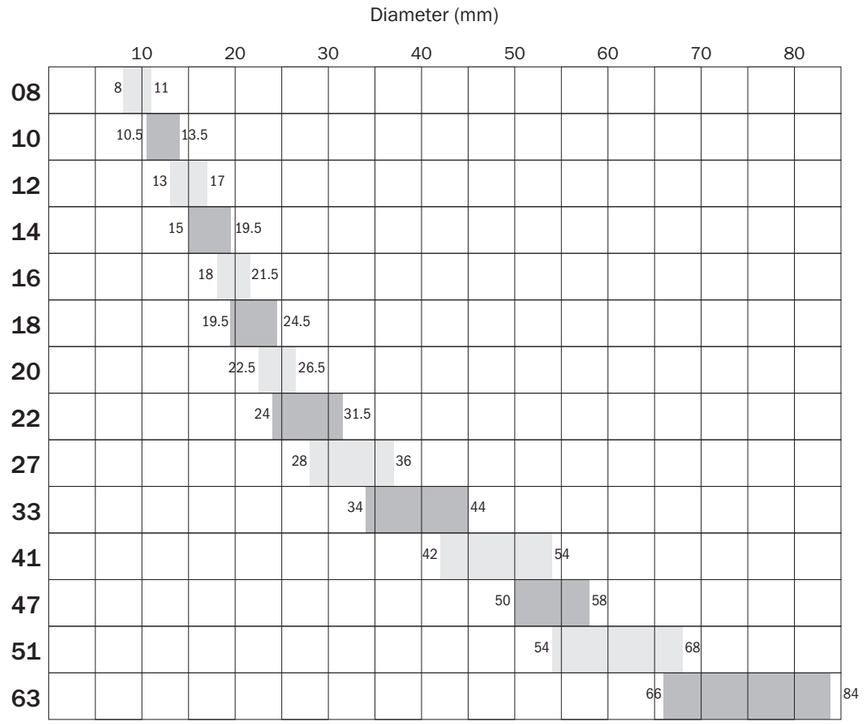

End of Arm Tooling | Speciality Grippers *Expansion Grippers*

Expansion Grippers p. 235
Dock & Lock Grippers p. 239

IF-E & IF-S – Spare Silicone Elastomers for IGD/IGU Expansion Grippers

EPDM

Silicone

Part No. EPDM	Part No. Silicone	Ref	Weight (g)
IF08E02	IF08S01	IGU08E	1
IF10E02	IF10S01	IGU10E	1
IF12E02U	IF12S01U	IGU12E	2
IF14E02U	IF14S01U	IGU14E	3
IF16E02U	IF16S01U	IGU16E	3
IF18E02	IF18S01	IGU18E	4
IF20E02	IF20S01	IGU20E	3,3
IF22E02	IF22S01	IGU22E	7
IF27E02	IF27S01	IGU27E	10
IF33E02	IF33S01	IGU33E	20
IF41E02	IF41S01	IGU41E	33
IF47E02	IF47S01	IGU47E	60
IF51E02	IF51S01	IGU51E	65
IF63E02	IF63S01	IGU63E	130

EPDM temperature range (-50°C to +140°C).
EPDM is mark-free and provides a higher coefficient of friction.
The expected medium life time of the elastic part in EPDM is about 0.5 million cycles.

Silicone temperature range (-70°C to +200°C).
The expected medium life time of the elastic part in Silicone is about 1 million cycles.
Not suitable in some industries, due to residue left after contact with silicone.

6

End of Arm Tooling (EOAT)

IGU-SB Sensor Holder

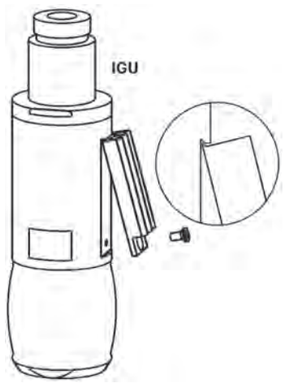

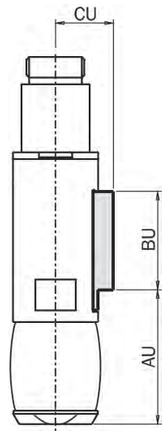

Part No.	AU mm	BU mm	CU mm	Ref IGU	Weight (g)
IGU27-SB	39,5	29	17	Ø27	4
IGU33-SB	46,5	33	19,8	Ø33	5
IGU41-SB	55,5	36,5	23,8	Ø41,Ø47	5
IGU51-SB	71,5	39	28,5	Ø51	5
IGU63-SB	87,5	45	33,5	Ø63	7

Expansion grippers sizes 27 to 63, have magnets integrated into their pistons.
This sensor mounting bracket alows sensors to be equiped in order to detect magnet position.
One or two sensors can be fitted on a gripper.

SN – Sensor for Expansion Grippers IGD & IGU

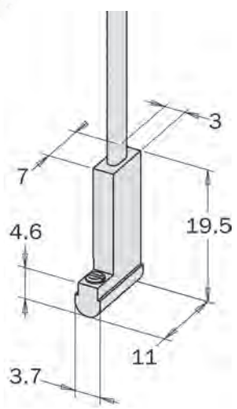

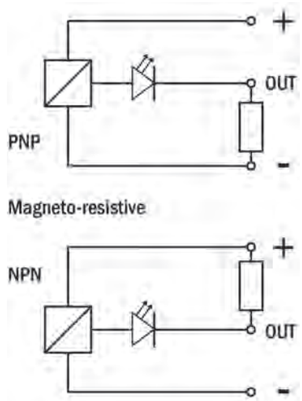

Part No.	Output	Sensor Type	Connector Lead - m	Ref.	Weight (g)
SN.3N203-G	PNP	Magnetoresistive NO	M8 -3 pin	IGD/IGU	4
SN.3M203-G	NPN	Magnetoresistive NO	M8 -3 pin	IGD/IGU	4
SN.4N225-G	PNP	Magnetoresistive NO		IGD/IGU	22
SN.4M225-G	NPN	Magnetoresistive NO		IGD/IGU	22

GCLU. – Centering Locking Unit

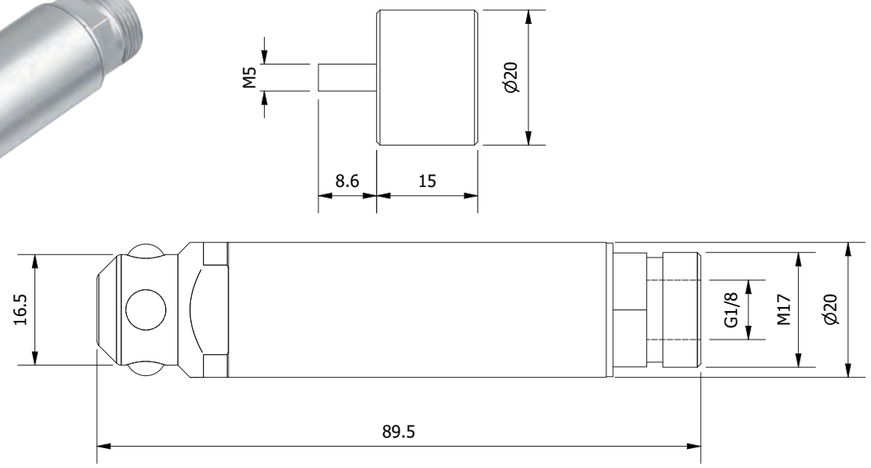

Part No.	Position	Closing force (6 bar)	Weight (g)
GCLU.20.G	Gripper side	750N	93
GCLU.20.M	Mould side		60

Single acting.
High gripping force.
ISO H7 tolerance is used for positioning.

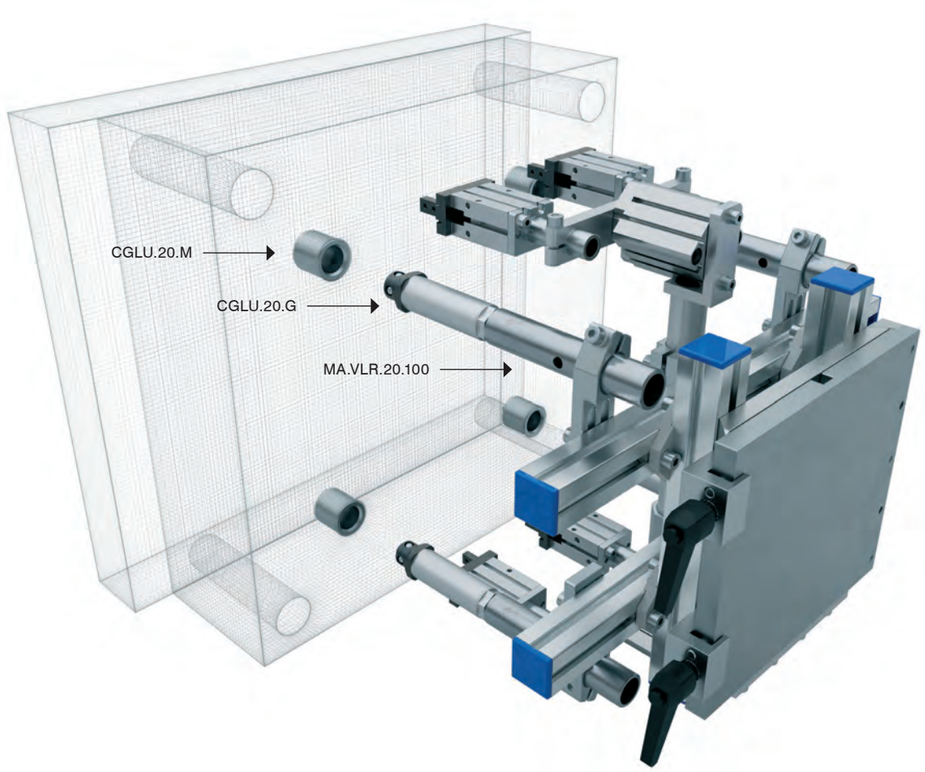

MA.AGG – Engagement Gripper

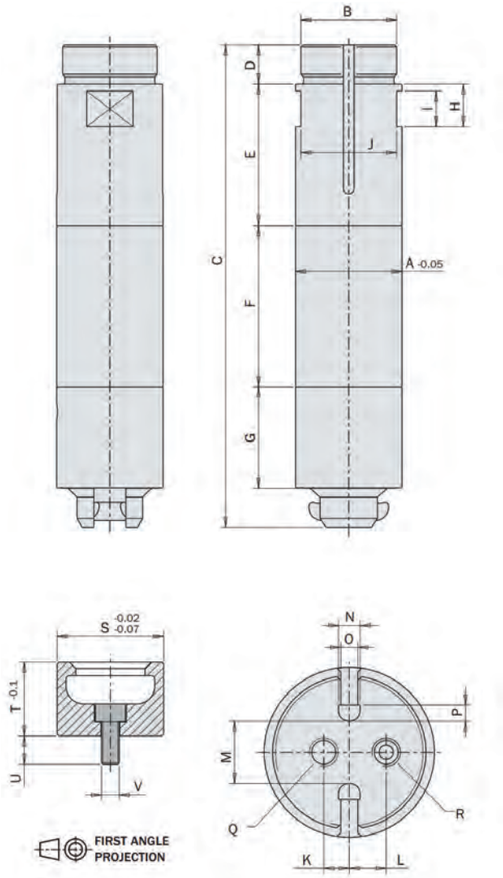

Part No.	A	B	C	D	E	F	G	H	I	J	K	L	M	N	O	P	Q	R	Weight (g)
MA.GG19-B	Ø20	M17x1	70,5	8	32	4	19,5	10	8	18	0								85
MA.GG21-B	Ø20	M17x1	96,5	8	28	34	19,5	10	8	18	2,8	4,6	6	3,8	3	2,8	M3	M3	115

The MA.GG is used to provide a precise centering between the robot and the mould.
MA.GG…B is fitted to the Robot, MA.GG…C is fiited to the mould.
Ideal for insert loading.
MA.GG19-B: Single acting, spring return (NO).
MA.GG21-B: Double acting, with safety spring (NC).
Maximum operating pressure: 8 bar.
Operating temperature range: 5° to 60°C.

Part No.	S	T	U	V	Weight (g)
MA.GG21-C	Ø20	15,3	6,7	M4	25

End of Arm Tooling | Speciality Grippers *Dock and Lock Grippers*

Expansion Grippers p. 235
Dock & Lock Grippers p. 239

MA.GG – Engagement Gripper

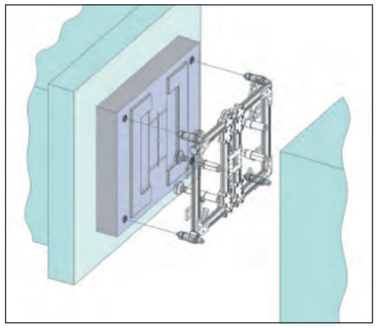

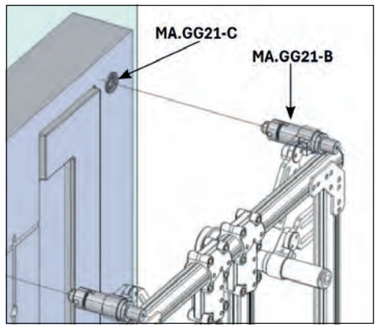

	MA.GG19-B	MA.GG21-B
Maximum axial load without compressed air before releaseasing	0 N	600 N
Maximum axial load with compressed air before releaseasing	2000 N	2000 N
Pressure range	2 - 8 bar (NO)	4 - 8 bar (NC)
Temperature range	5° - 60°C.	5° - 60°C.

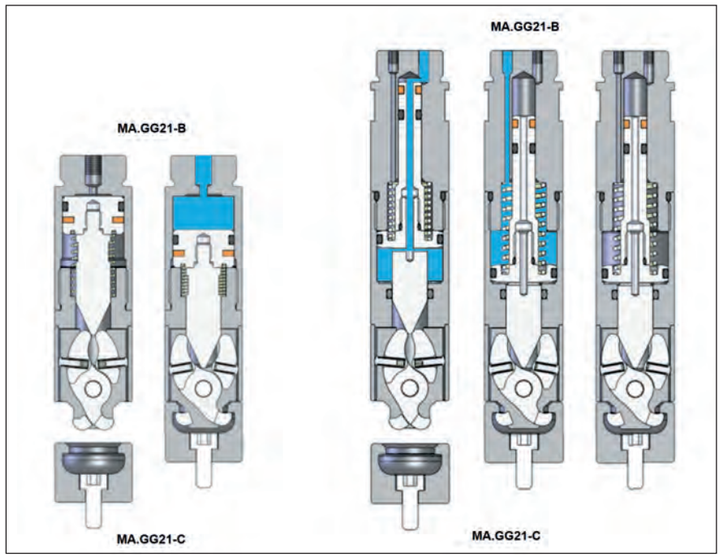

SN – Sensor for Grippers MA.GG19-B

Part No.	Output	Sensor Type	Connector Lead - m	Ref.	Weight (g)
SN.3N203-G	PNP	Magnetoresistive NO	M8 -3 pin	MA.GG19-B	4
SN.3M203-G	NPN	Magnetoresistive NO	M8 -3 pin	MA.GG19-B	4
SN.4N225-G	PNP	Magnetoresistive NO		MA.GG19-B	4
SN.4M225-G	NPN	Magnetoresistive NO		MA.GG19-B	4

Sensor Mounting Bracket Ø20 – SMB.20.L

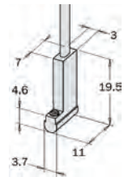

SS – Sensor for Grippers MA.GG21-B

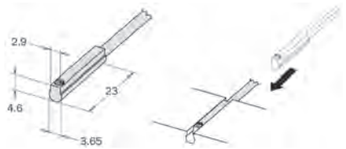

Part No.	Output	Sensor Type	Connector Lead - m	Ref.	Weight (g)
SS.3N203-G	PNP	Magnetoresistive NO	M8 -3 pin	MA.GG21-B	4
SS.3M203-G	NPN	Magnetoresistive NO	M8 -3 pin	MA.GG21-B	4
SS.4N225-G	PNP	Magnetoresistive NO		MA.GG21-B	22
SS.4M225-G	NPN	Magnetoresistive NO		MA.GG21-B	22

243 Nipper Bodies – Round

244 N. Series Nipper Blades

245 GPT Series Nipper Blades

247 Nipper Mounting Brackets

Nipper Bodies – Round p. 243
N. Series – Nipper Blades p. 244
GPT Series – Nipper Blades p. 245
Nipper Mounting Brackets p. 247

SPT. – Air Nipper Bodies S - Series

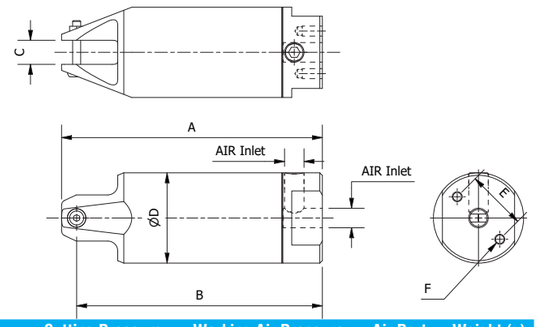

Part No.	Sprue Ø Cut	A	ØD	B	C	E	F	Cutting Pressure	Working Air Pressure	Air Port	Weight (g)
SPT-20R	7mm	130	45	126	12	30	M5x12	140 kg	5-6 Bar	G 1/8"	272
SPT-30R	10mm	166	56	163	17	40	M6x12	280 kg	5-6 Bar	G 1/8"	508

GT – Air Nipper Bodies GT - Series - Round

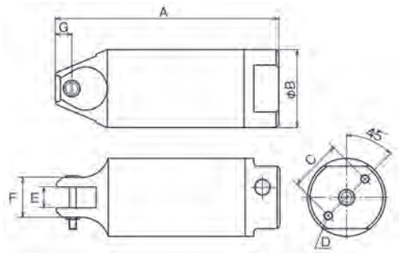

Part No.	Sprue Ø Cut	A	B	C	D	E	F	G	Cuting pressure	Working Pressure	Air Port	Weight (g)
GT-NR5	2mm	94	30	20	M4x10	7	17	7	40Kg	4-5 Bar	R1/8	110
GT-NR10L	4mm	113	36	24	M4x10	12	20	7	60Kg	5-6 Bar	R1/8	215
GT-NR20	7mm	129	45	30	M5x12	12	23	9,5	140Kg	5-6 Bar	R1/8	280
GT-NR30	10mm	165	56	40	M6x12	17	30	10,5	280kg	5-6 Bar	R1/8	505
GT-NR50	12mm	222	75	50	M8x12	25,2	43	15	480Kg	5-6 Bar	R1/4	1190

High quality and reliable performance.
Two air intakes provided.

6
End of Arm Tooling (EOAT)

Nipper Bodies – Round p. 243
N. Series – Nipper Blades p. 244
GPT Series – Nipper Blades p. 245
Nipper Mounting Brackets p. 247

End of Arm Tooling | Nipper Blades *N. Series Nipper Blades / GPT Series Nipper Blades*

Nipper Bodies – Round p. 243
N. Series – Nipper Blades p. 244
GPT Series – Nipper Blades p. 245
Nipper Mounting Brackets p. 247

N.AP – Standard Blades, 15°

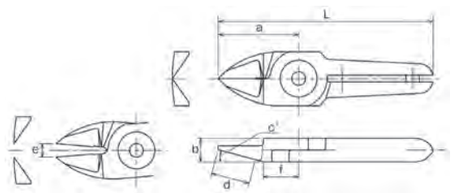

Part No.	a	b	c(°)	d: Effective Length	e: Blade Oppening	f	L	Weight (g)
N5AP	24	7	15	11,5	4	10,5	64	40
N10LAB152	61	12	15	35	10		115	165
N10LAP	35	12	15	16	5	15	89	85
N20AP	35	12	15	16	11	15	95	125
N30AP	66	17	15	38	16	24	150	380

Material: Special Alloy Steel

N.PF – Deep Angle Blades, 30°/40°

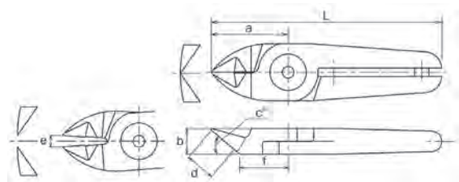

Part No.	a	b	c(°)	d: Effective Length	e: Blade Oppening	f	L	Weight (g)
N10LPF	35	12	40	13,5	5	21	89	120
N20PF	35	12	40	13,5	11	21	95	130
N30PF	58	17	30	25	15	33	142	390
N30AA114	76	17	30	50	20		160	385

Material: Special Alloy Steel

N.AE – Perpendicular End Cut Blades

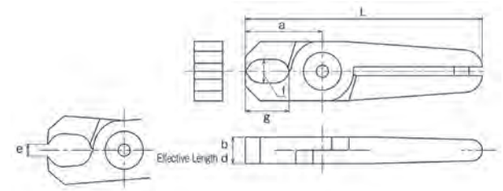

Part No.	a	b	c(°)	d: Effective Length	e: Blade Oppening	L	Weight (g)
N20AE	28	12	10x15.5	12	8	88	135
N30AE	35	17	13x28	17	12	129	395

Material: Special Alloy Steel

N.AH – Offset Blades

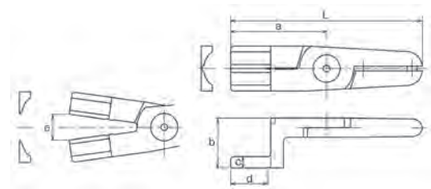

Part No.	a	b	c(°)	d: Effective Length	e: Blade Oppening	L	Weight (g)
N20AH	60	31	7	23	16	120	240

Material: Special Alloy Steel

N.AJ – Straight Blades

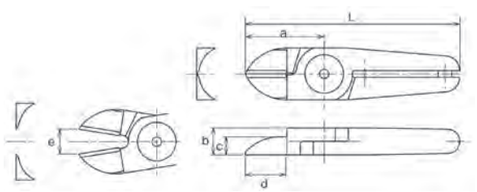

Part No.	a	b	c(°)	d: Effective Length	e: Blade Oppening	L	Weight (g)
N20AJ	35	12	8	18	11	95	125
N30AJ	52	17	8	28	11	136	370

Material: Special Alloy Steel

N.AJL – Long Straight Blades

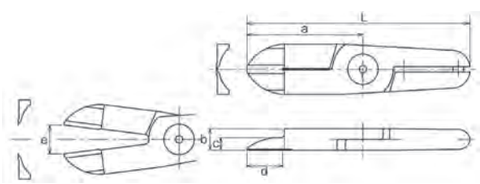

Part No.	a	b	c(°)	d: Effective Length	e: Blade Oppening	L	Weight (g)
N10LAJ	61	12	7	34	10	115	165
N20AJL	65	12	7	20	16	125	230
N30AJL	75	17	8	25	19	159	470

Material: Special Alloy Steel

N.AL – L Blade

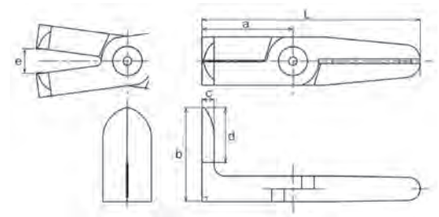

Part No.	a	b	c(°)	d: Effective Length	e: Blade Oppening	L	Weight (g)
N30AL525	60	62		36	16	144	520

Material: Special Alloy Steel

GPT.ST – Standard Blade 15°

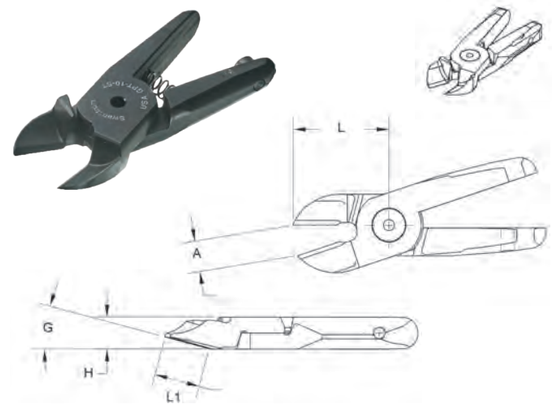

Part No.	Size	A	L	L1	H	G
GPT-20-ST	20	11	36	17	12	15°
GPT-30-ST	30	18	63	36	17	15°

6
End of Arm Tooling (EOAT)

GPT.LI – Inline Straight Blade

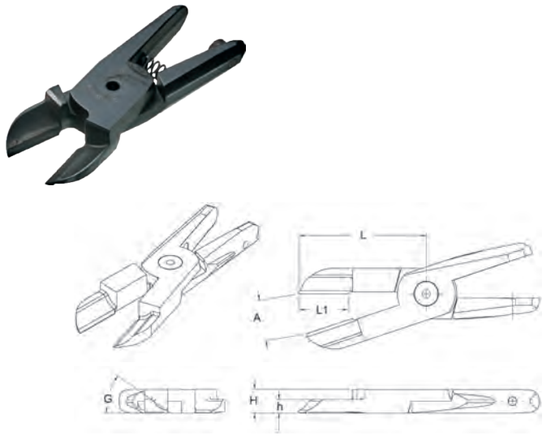

Part No.	Size	A	L	L1	H	h	G
GPT-20-LI	20	21	66	25	12	7	35°
GPT-30-LI	30	22	77	29	17	8	35°

Part No.	a	b	c(°)	d: Effective Length	e: Blade Oppening	L	Weight (g)
N30AL525	60	62		36	16	144	520

Material: Special Alloy Steel

GPT.DA – Deep Angle

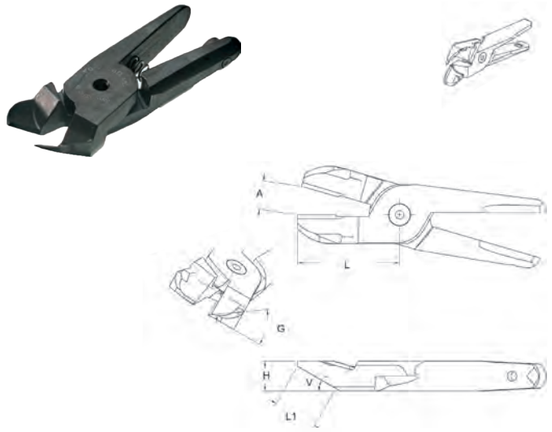

Part No.	Size	A	L	L1	H	V	G
GPT-20-DA	20	11	36	15	12	40°	35°
GPT-30-DA	30	16	58	25	17	30°	35°

GPT.LA – Long Angle Blade

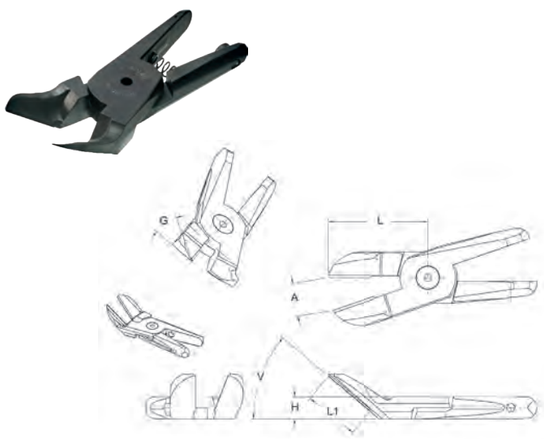

Part No.	Size	A	L	L1	H	V	G
GPT-20-LA	20	17	53	29	12	40°	30°
GPT-30-LA	30	23	83	53	17	30°	30°

GPT.DA90 – Long 90° Angle Blade

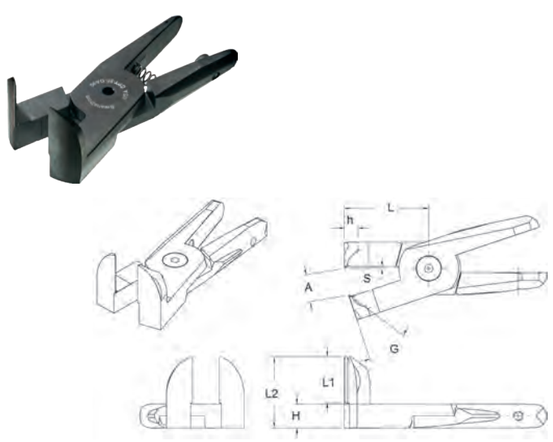

Part No.	Size	A	L	L1	L2	G	H	h	S
GPT-20-DA90	20	13	42	23	35	35°	12	7	1
GPT-30-DA90	30	11	39	33	52	35°	17	8	2

GPT.PE – Perpendicular End Cut Blade

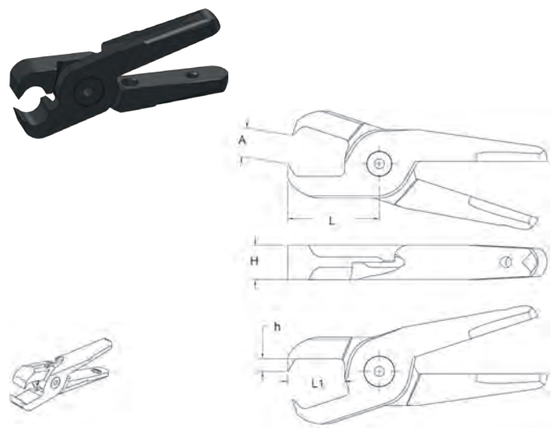

Part No.	Size	A	L	L1	H	h
GPT-20-PE	20	9	28	12	12	4
GPT-30-PE	30	14	46	28	17	6

GPT.PEL – Long Perpendicular End Cut Blade

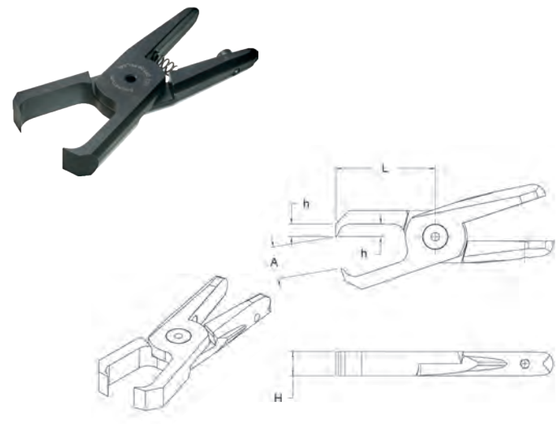

Part No.	Size	A	L	H	h
GPT-20-PELA49	20	16	49	12	6

SCH – Mounting Brackets for Air Nippers

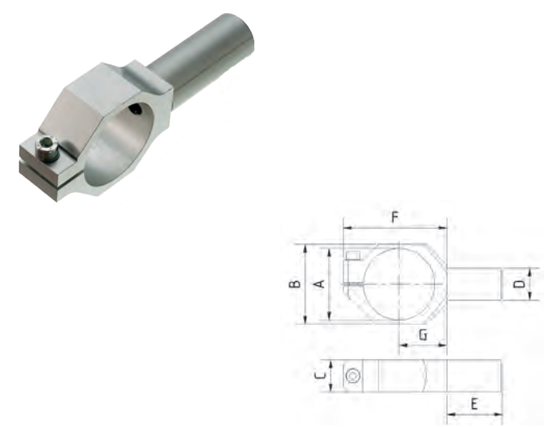

Part No.	A	B	C	D	E	F	G	REF	Weight (g)
SCH-05	30	38	20	20	48	54	25	GT-NR5	91
SCH-10	36	43	20	20	48	60	28	GT-NR10L	95
SCH-20	45	52	20	20	48	68	33	GT-NR20/SPT-20R	102
SCH-30	56	54	20	20	48	80	38	GT-NR30/SPT-30R	117
SCH-50	75	83	30	30	50	96	47	GT-NR50	275

Material: Aluinium
Surface: Silver anodized.

NGC. – Nipper / Gripper Combination Clamp

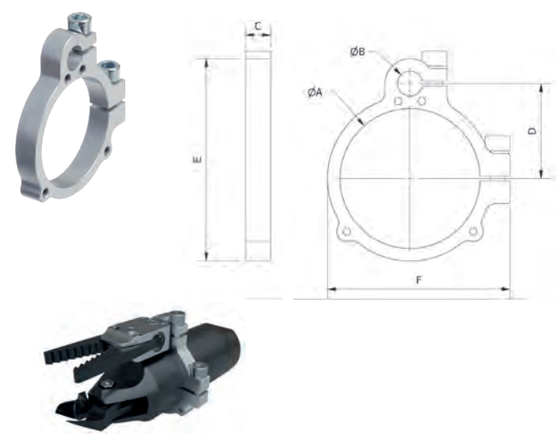

Part No.	A	B	C	D	E	F	REF	Weight (g)
NGC.1010	36	10	10	28	62,8	53	GT-NR10L	27
NGC.2010	45	10	10	32,5	70	62	GT-NR20/SPT-20R	30
NGC.3010	56	10	10	38	81	73	GT-NR30/SPT-30R	43
NGC.5010	75	10	10	47,5	100	92,5	GT-NR50	43

Material: Aluinium.
Surface: Silver anodized.

NSB.A
– Swivel Mounting Bracket for Air Nippers – Part A

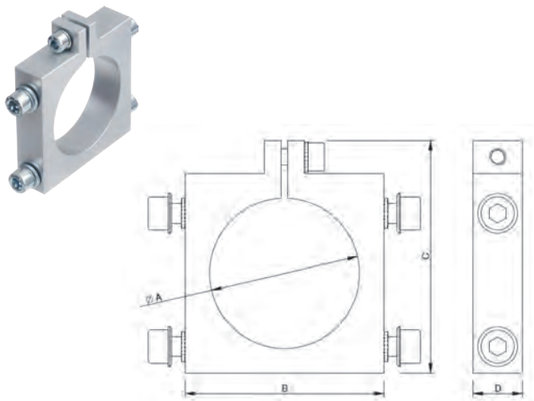

Part No.	A	B	C	D	REF	Weight (g)
NSB.30A	30	45	55	15	GT-NR5	87
NSB.36A	36	50	62	15	GT-NR10L	97
NSB.45A	45	60	70	15	GT-NR20/SPT-20R	115
NSB.56A	56	70	85	15	GT-NR30/SPT-30R	136
NSB.75A	75	90	105	15	GT-NR50	188

Material: Aluinium
Surface: Silver anodized.

NSB.B
– Swivel Mounting Bracket for Air Nippers – Part B

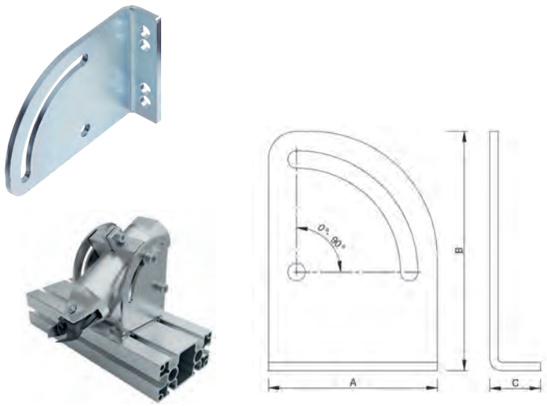

Part No.	A	B	C	REF	Weight (g)	F
NSB.30B	50	75	18	GT-NR5	84	54
NSB.36B	55	80	18	GT-NR10L	100	60
NSB.45B	60	85	18	GT-NR20/SPT-20R	116	68
NSB.56B	65	90	18	GT-NR30/SPT-30R	134	80
NSB.75B	85	122	28	GT-NR50	246	96

Material: Zinc plated steel.

NMBS. – Mounting Brackets Steel for Air Nippers

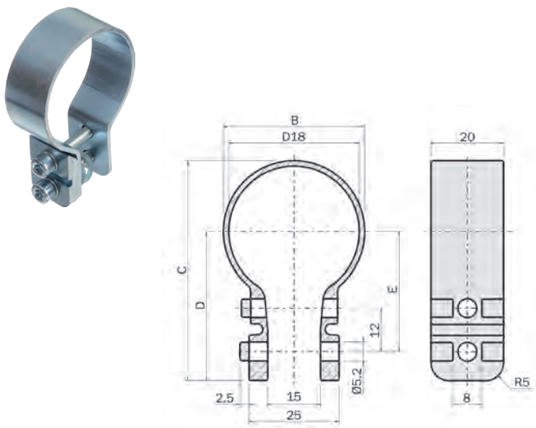

Part No.	D18	B	C	D	E	Weight (g)
NMBS.30	30	33	55	38,5	30,5	69
NMBS.36	36	39	60,5	41	33	75
NMBS.45	45	48	70	46	38	80
NMBS.56	56	60	83,5	53,5	45,5	102

NMS. – Nipper Mounting Bracket Shaft

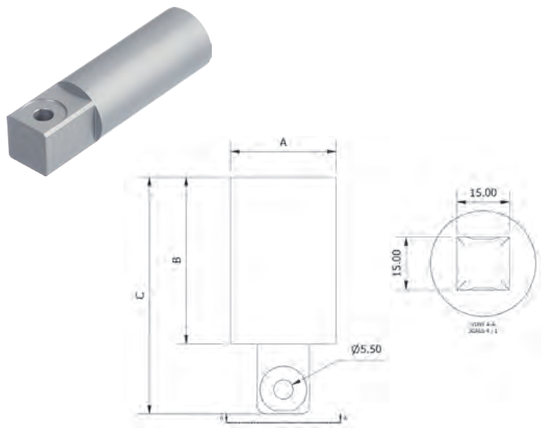

Part No.	A	B	C	Weight (g)
NMS.2048	20	48	67,5	56
NMS.3048	30	48	67,5	82

Material: Aluinium.
Surface: Silver anodized.

End of Arm Tooling | Nipper Blades

Nipper Bodies – Round p. 243
N. Series – Nipper Blades p. 244
GPT Series – Nipper Blades p. 245
Nipper Mounting Brackets p. 247

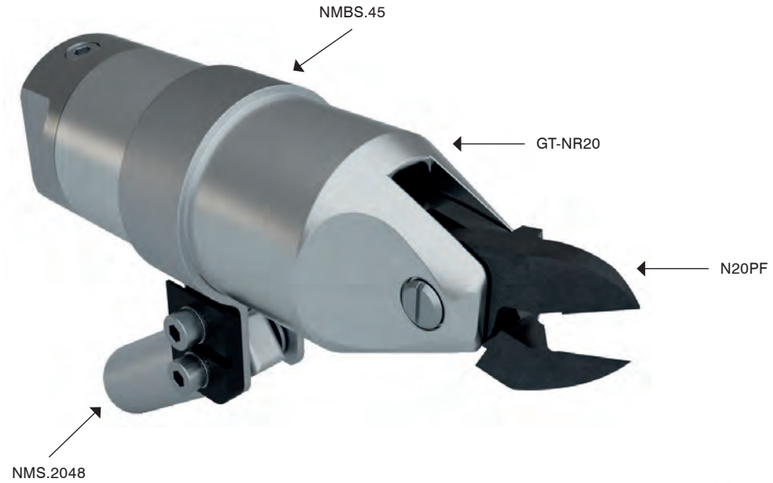

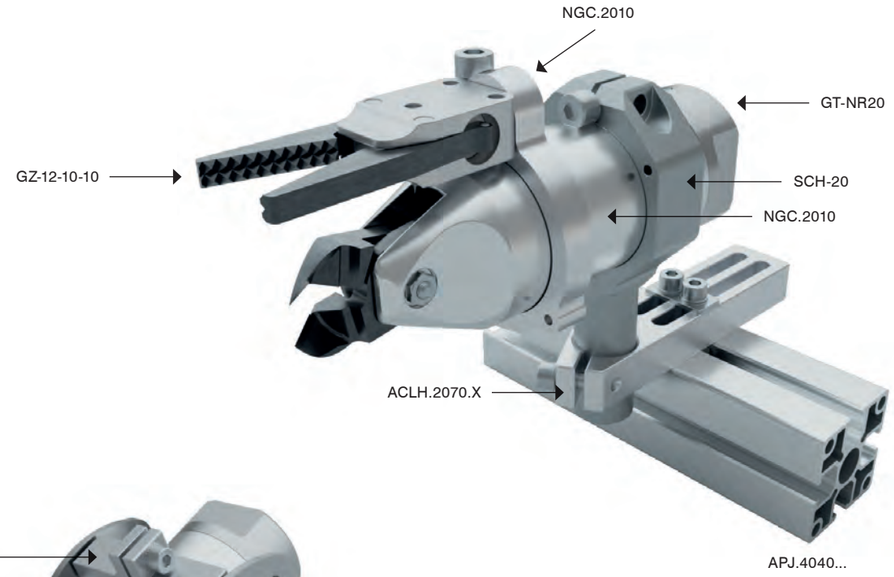

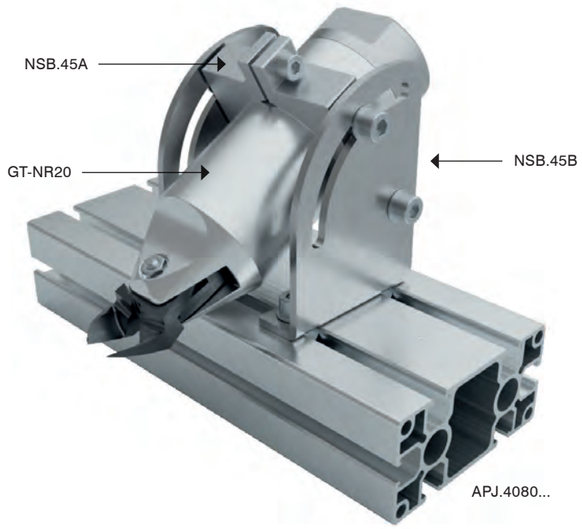

Compact Cylinders with Guide Rod p. 251
Compact Cylinders p. 252
Mounts & Accessories p. 253
Vacuum Cylinders p. 255
Mini Cylinders p. 256
Accessories p. 257

251 Compact Cylinders with Guide Rod

252 Compact Cylinders

253 Mounts & Accessories

255 Vacuum Cylinders

256 Mini Cylinders

257 Accessories

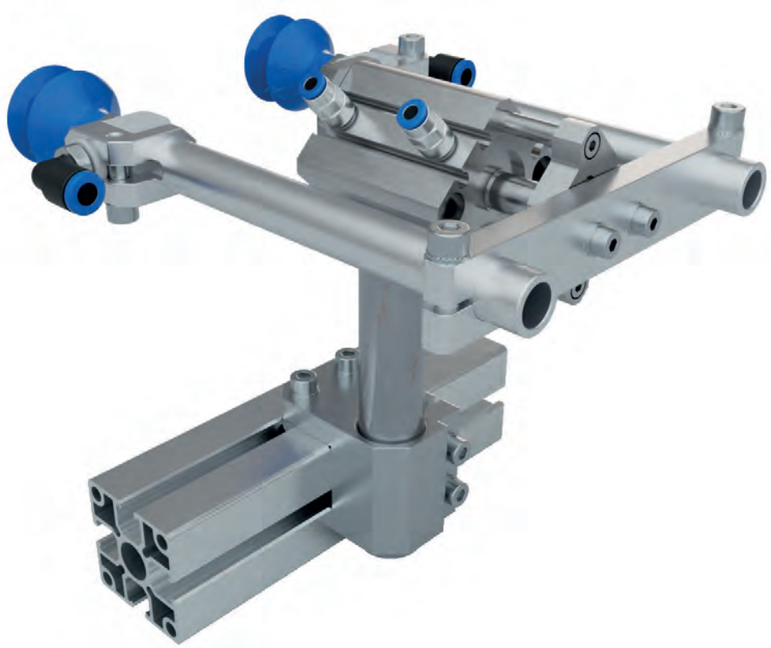

CCTQ. – Compact Cylinder, Guide Rod Type

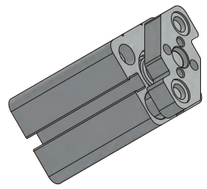

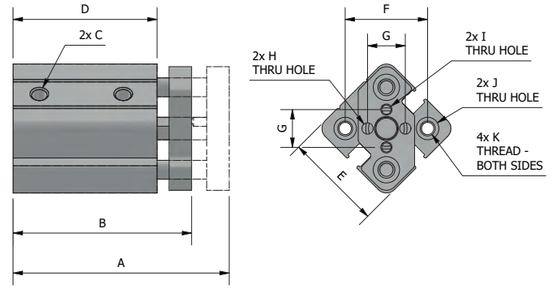

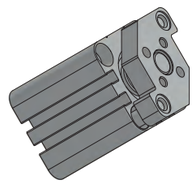

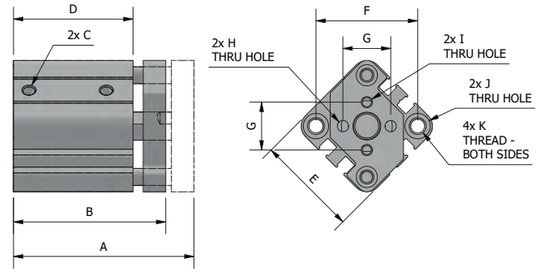

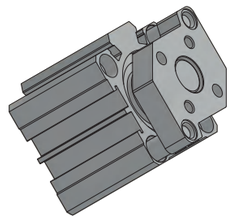

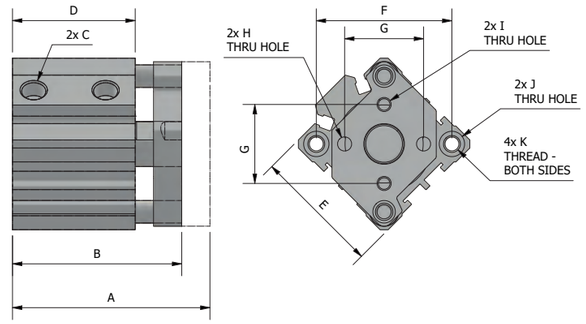

Part No.	Piston bore	Stroke	A	B	C	D	E	F	G	H	I	J	K	Weight (g)
CCTQ.1210	12	10	57,5	47,5	M5X0.8	38,3	26	22	10	M3X0.5	Ø3	Ø3.4	M4X0.7	59
CCTQ.1220	12	20	77,5	57,5	M5X0.8	48,3	26	22	10	M3X0.5	Ø3	Ø3.4	M4X0.7	77
CCTQ.1230	12	30	97,5	67,5	M5X0.8	58,3	26	22	10	M3X0.5	Ø3	Ø3.4	M4X0.7	93
CCTQ.2010	20	10	64	54	M5X0.8	42,5	36	36	17	M4X0.7	Ø4	Ø5.2	M6X1.0	138
CCTQ.2020	20	20	84	64	M5X0.8	52,5	36	36	17	M4X0.7	Ø4	Ø5.2	M6X1.0	168
CCTQ.2030	20	30	104	74	M5X0.8	62,5	36	36	17	M4X0.7	Ø4	Ø5.2	M6X1.0	197
CCTQ.3210	32	10	70	60	G 1/8	43,5	45	48	28	M5X0.8	Ø5	Ø5.2	M6X1.0	264
CCTQ.3220	32	20	90	70	G 1/8	53,5	45	48	28	M5X0.8	Ø5	Ø5.2	M6X1.0	309
CCTQ.3230	32	30	110	80	G 1/8	63,5	45	48	28	M5X0.8	Ø5	Ø5.2	M6X1.0	356

CCAQ. – Compact Cylinder

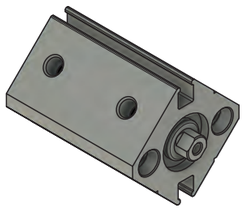

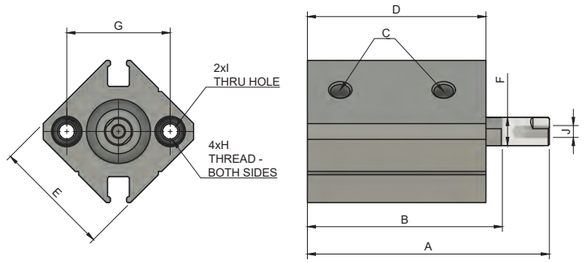

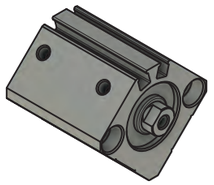

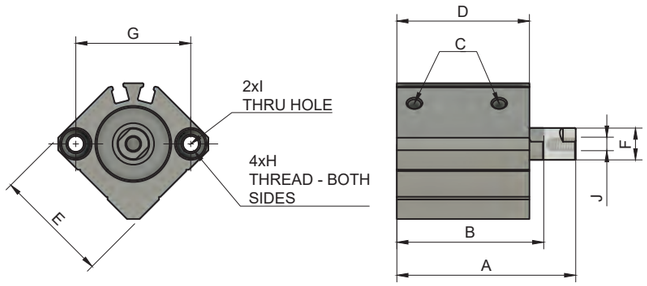

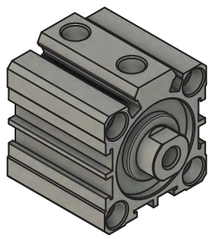

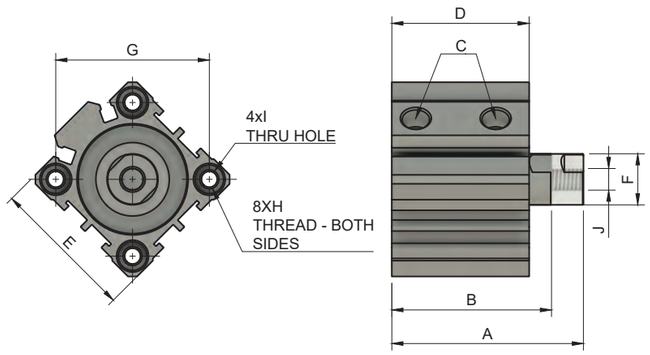

Part No.	Piston bore	Stroke	A	B	C	D	E	F	G	H	I	J	Weight (g)
CCAQ.1210	12	10	51,5	41,5	M5X0.8	38	25	6	22	M4X0.7	Ø3.4	M3X0.5	44
CCAQ.1220	12	20	71,5	51,5	M5X0.8	48	25	6	22	M4X0.7	Ø3.4	M3X0.5	69
CCAQ.1230	12	30	91,5	61,5	M5X0.8	58	25	6	22	M4X0.7	Ø3.4	M3X0.5	81
CCAQ.2010	20	10	56	46	M5X0.8	41,5	36	10	36	M6X1.0	Ø5.2	M5X0.8	106
CCAQ.2020	20	20	76	56	M5X0.8	51,5	36	10	36	M6X1.0	Ø5.2	M5X0.8	138
CCAQ.2030	20	30	96	66	M5X0.8	61,5	36	10	36	M6X1.0	Ø5.2	M5X0.8	158
CCAQ.3210	32	10	60	50	G 1/8	43	45	16	48	M6X1.0	Ø5.2	M8X1.25	186
CCAQ.3220	32	20	80	60	G 1/8	53	45	16	48	M6X1.0	Ø5.2	M8X1.25	231
CCAQ.3230	32	30	100	70	G 1/8	63	45	16	48	M6X1.0	Ø5.2	M8X1.25	281

SN.DMSG. – T-Slot Sensor

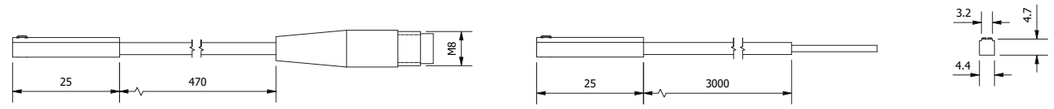

Part No.	Output	Sensor type	Connector	Lead m	REF	Weight (g)
SN.DMSGP.M8	PNP	Magnetic	M8 3pin	0.5	PG/AG/CCTQ/CCAQ	4
SN.DMSGN.M8	NPN	Magnetic	M8 3pin	0.5	PG/AG/CCTQ/CCAQ	4
SN.DMSGP.3M	PNP	Magnetic		3	PG/AG/CCTQ/CCAQ	4
SN.DMSGN.3M	NPN	Magnetic		3	PG/AG/CCTQ/CCAQ	4

MB.CC. – Mounting Bracket for Compact Cylinder

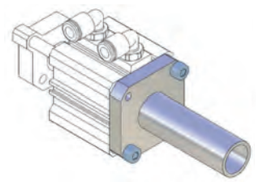

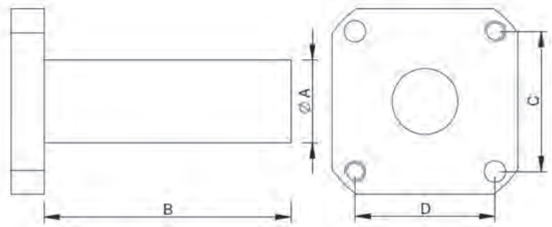

Part No.	A	B	C	D	REF	Weight (g)
MB.CC12.1430	14	30	15,5	15,5	Ø12	19
MB.CC20.1440	14	40	25,5	25,5	Ø20	32
MB.CC32.2060	20	60	34	34	Ø32	55
MB.CC32.2090	20	90	34	34	Ø32	74

Material: Aluinium.
Surface: Silver anodized.
REF: Suitable for cylinders CCAQ and CCTQ.

MB.ZC. – Mounting Bracket for Compact Cylinder

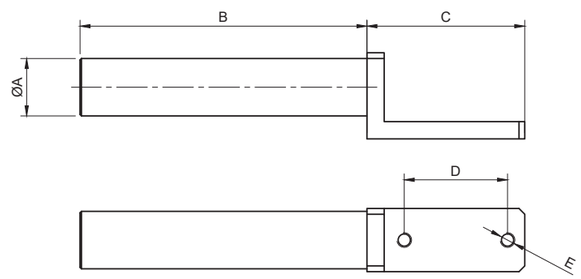

Part No.	A	B	C	D	E	Weight (g)
MB.ZC12.1060	10	60	38	22	M3	14
MB.ZC20.2080	20	80	55	36	M5	55
MB.ZC32.20100	20	100	68	48	M5	58

MCC. – Clamp Brackets for Cylinders

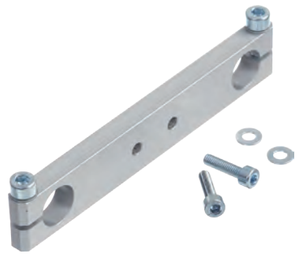

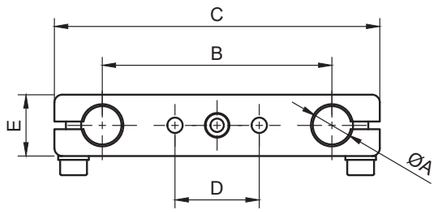

Part No.	A	B	C	D	E	Weight (g)
MCC.12.1060	10	60	85	10	16	29
MCC.20.1480	14	80	140	17	20	67
MCC.32.20120	20	120	160	28	25	135

VCA. – Adapters for Vacuum Cups

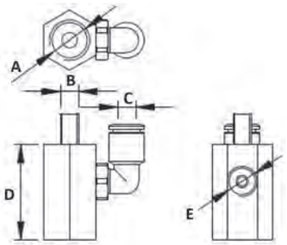

Part No.	A	B	C	D	E	REF	Weight (g)
VCA.M4.18	G 1/8	M4	4	24,5	M5	Ø12	13
VCA.M6.18	G 1/8	M5	4	24,5	M5	Ø16	15
VCA.M6.14	G 1/4	M6	6	31	G1/8	Ø25	24
VCA.M5.18	G 1/8	M5	4	34,5	M5	Ø20	21
VCA.M8.14	G 1/4	M8	6	31	G1/8	Ø32	22

CPP. – Cylinder Pressure Plate

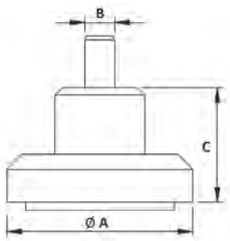

Part No.	A	B	C	REF	Weight (g)
CPP.20.03	20	M3	14	Ø12	5
CPP.25.04	25	M4	15	Ø16	10
CPP.30.05	30	M5	18	Ø20	17
CPP.40.08	40	M8	20	Ø32	46
CPP.40.18	40	G 1/8	20		40

Material: Aluinium.
Surface: Silver anodized.

MP.OFL – Short Stroke Pneumatic Cylinder

Part No.	Stroke	Piston Bore	Closing force at 6 bar	Weight (g)
MP.OFL2010	10mm	20mm	130N	60
MP.OFL3015	15mm	30mm	300N	110
MP.OFL3030	30mm	30mm	300N	140

Double Acting and Non rotating.
Through hole for vacuum cup mounting - M5 or G1/8.
Ø20mm Clampable shaf.t
Maximum operating pressure: 8 bar.
Operating temperature range: 5° to 60°C.
Optional magnetic sensors.

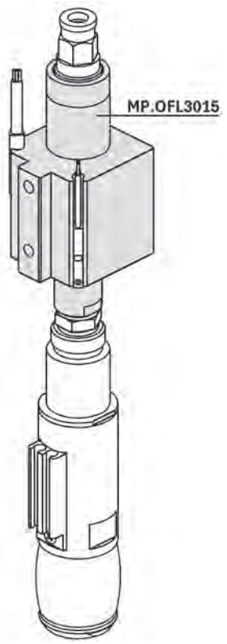

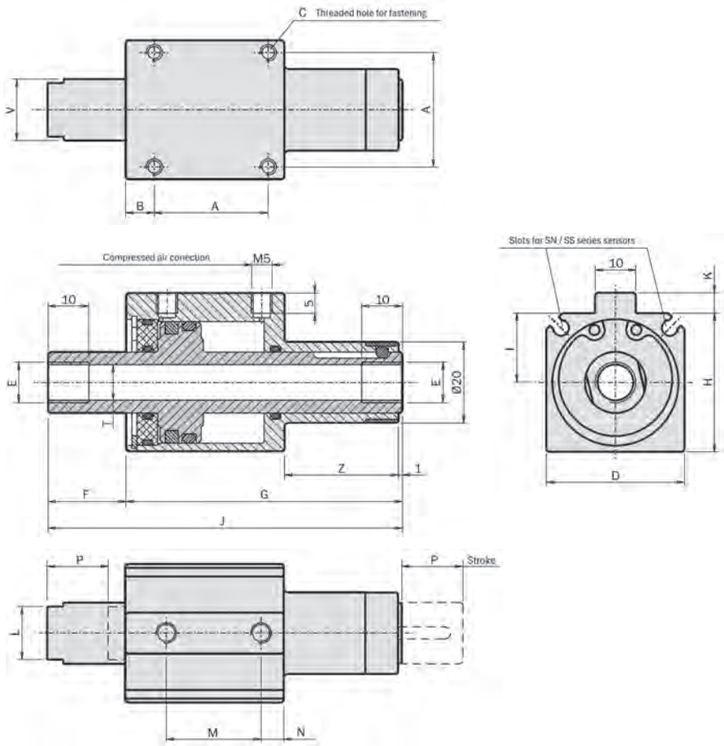

Part No.	A	B	C	D	E	F	G	H	I	J	K	L	M	N	P	T	V	Z
MP.OFL2010	19	9	M3x4	24	M5	14,2	59	25	13	74,2	4	8	16	5	10	Ø4.2	Ø10	28
MP.OFL3015	28	7	M4x6	34	G1/8	19,2	68	34	17	87,2	5	13	23,3	5,6	15	Ø8.8	Ø15	28
MP.OFL3030	28	7	M4x6	34	G1/8	34,2	91	34	17	125,2	5	13	38,3	5,6	30	Ø8.8	Ø15	36

Compact Cylinders with Guide Rod	p. 251	Vacuum Cylinders	p. 255
Compact Cylinders	p. 252	**Mini Cylinders**	**p. 256**
Mounts & Accessories	p. 253	Accessories	p. 257

MP.OFC – Non-rotative Mini-Cylinder

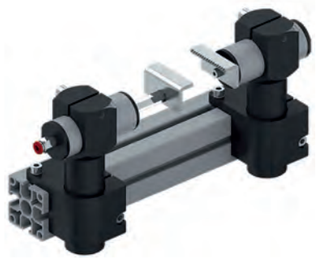

Part No.	Body Ø	Stroke	Piston Bore	Opening force at 6 bar	Weight (g)
MP.OFC1410	14mm	10mm	20mm	43N	20
MP.OFC2020	20mm	15mm	30mm	113N	40
MP.OFC3030	30mm	30mm	30mm	271N	85

Single Acting and Non rotating.
Clampable body.
Maximum operating pressure: 8 bar.
Operating temperature range: 5° to 60°C.
Optional magnetic sensors.

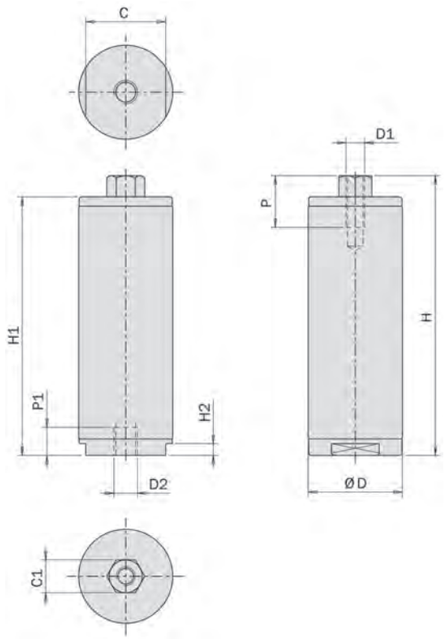

Part No.	C	C1	D	D1	D2	H	H1	H2	P	P1
MP.OFC1410	12	5,5	Ø14	M3	M5	50	45,5	2,5	7	6
MP.OFC2020	17	7	Ø20	M4	M5	59,5	55	2,5	8	6
MP.OFC3030	27	7	Ø30	M4	M5	75	70,5	2,5	9	6

Compact Cylinders with Guide Rod	p. 251	Vacuum Cylinders	p. 255
Compact Cylinders	p. 252	Mini Cylinders	p. 256
Mounts & Accessories	p. 253	**Accessories**	**p. 257**

SN – Sensor for Short Stroke & Mini Cylinders

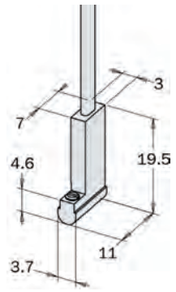

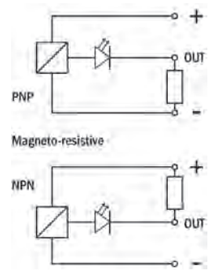

Part No.	Output	Sensor Type	Connector Lead - m	Ref.	Weight (g)
SN.3N203-G	PNP	Magnetoresistive NO	M8 -3 pin	MP.OFL/OFC	4
SN.3M203-G	NPN	Magnetoresistive NO	M8 -3 pin	MP.OFL/OFC	4
SN.4N225-G	PNP	Magnetoresistive NO		MP.OFL/OFC	22
SN.4M225-G	NPN	Magnetoresistive NO		MP.OFL/OFC	22

SMB.L – Sensor Mounting Bracket

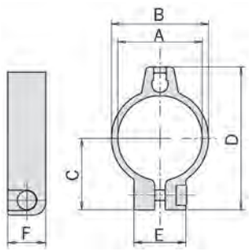

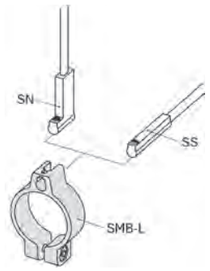

Part No.	A mm	B mm	C mm	D mm	E mm	F mm	Ref	Weight (g)
SMB.14.L	Ø14	16,8	13,5	27,3	12,3	9	MP.OF 14	2
SMB.20.L	Ø20	23	17	33,8	12,3	9	MP.OF 20	2,5
SMB.30.L	Ø30	33,2	23	44,8	12,3	9	MP.OF 30	3

06. Fittings, Tubes & Manifolds

259 Manifolds

260 Fittings – G Thread with O-Ring

261 Push to Connect Fittings

262 Fitting – R Thread

263 Male Elbow Flow Controller

263 Inline Flow Controller

263 Tubes

Manifolds p. 259
Fittings – G Thread with O-Ring p. 260
Push to Connect Fittings p. 261
Fitting – R Thread p. 262
Male Elbow – Flow Controller p. 263
Inline Flow Controller p. 263
Tubes p. 263

VMB. – Air/Vacuum Manifold 1 - 4

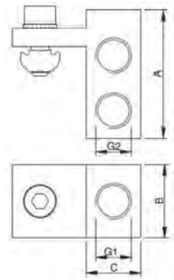

Part No.	A	B	C	G1	G2	REF	Weight (g)
VMB.14.1818.X	35	20	15	G 1/8	G 1/8	X	35
VMB.14.1818.J	35	20	15	G 1/8	G 1/8	J	37

Material: Aluinium.
Surface: Silver anodized.

VMB. – Air/Vacuum Manifold 1 - 8

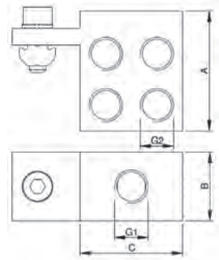

Part No.	A	B	C	G1	G2	REF	Weight (g)
VMB.18.1818.X	35	20	30	G 1/8	G 1/8	X	55
VMB.18.1818.J	35	20	30	G 1/8	G 1/8	J	58

VMB. – Air vacuum Manifold 2 - 4

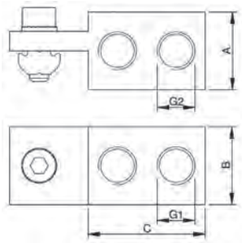

Part No.	A	B	C	G1	G2	REF	Weight (g)
VMB.24.1818.X	20	20	30	G 1/8	G 1/8	X	39
VMB.24.1818.J	40	20	30	G 1/8	G 1/8	J	41

VMB. – Air vacuum Manifold 2 - 8

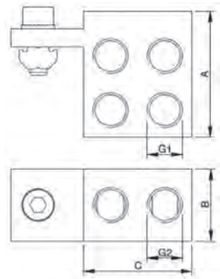

Part No.	A	B	C	G1	G2	REF	Weight (g)
VMB.28.1818.X	35	20	30	G 1/8	G 1/8	X	54
VMB.28.1818.J	35	20	30	G 1/8	G 1/8	J	57

VML. – Manifold Block 1 - 4

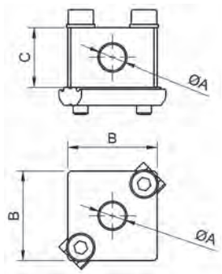

Part No.	A	B	C	REF	Weight (g)
VML.X.14.18	G 1/8	30	20	X	60
VML.X.14.14	G 1/4	40	20	X	85

Manifolds p. 259
Fittings – G Thread with O-Ring p. 260
Push to Connect Fittings p. 261
Fitting – R Thread p. 262
Male Elbow – Flow Controller p. 263
Inline Flow Controller p. 263
Tubes p. 263

PC - Push In Male Threaded Stud

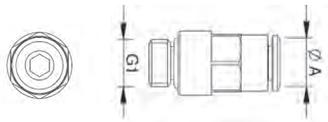

Part No.	Ø A	G1		Weight (g)
PC04-M5	4	M5	10	6
PC04-G01	4	G1/8	10	7,4
PC06-M5	6	M5	10	8
PC06-G01	6	G1/8	10	8,2
PC06-G02	6	G1/4	10	15
PC08-G02	8	G1/4	10	14

PL - Push In Male Threaded Elbow

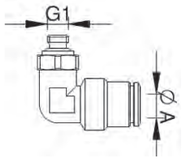

Part No.	Ø A	G1		Weight (g)
PL04-M5	4	M5	10	6
PL04-G01	4	G1/8	10	10
PL06-M5	6	M5	10	9
PL06-G01	6	G1/8	10	11
PL06-G02	6	G1/4	10	19
PL08-G02	8	G1/4	10	20

PLL - Push In Male Threaded Extended Elbow

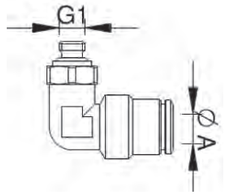

Part No.	Ø A	G1		Weight (g)
PLL04-G01	4	G1/8	10	11
PLL06-G01	6	G1/8	10	13

PX - Push In Male Threaded Y

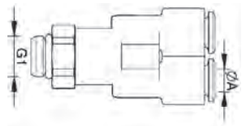

Part No.	Ø A	G1		Weight (g)
PX04-G01	4	G1/8	10	
PX06-G01	6	G1/8	10	
PX06-G02	6	G1/4	10	

PB - Push In Male Threaded Branch T

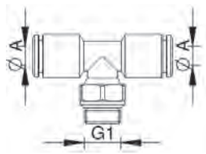

Part No.	Ø A	G1		Weight (g)
PB04-M5	4	M5	10	8
PB04-G01	4	G1/8	10	13
PB06-M5	6	M5	10	12
PB06-G01	6	G1/8	10	14
PB06-G02	6	G1/4	10	22
PB08-G02	8	G1/4	10	25

Manifolds p. 259
Fittings – G Thread with O-Ring p. 260
Push to Connect Fittings p. 261
Fitting – R Thread p. 262
Male Elbow – Flow Controller p. 263
Inline Flow Controller p. 263
Tubes p. 263

MSY - Push in Union Y

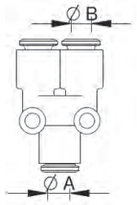

Part No.	Ø A	Ø B		
MSY04	4	4	10	
MSY06	6	6	10	
MSY08	8	8	10	

MST - Push in Union T

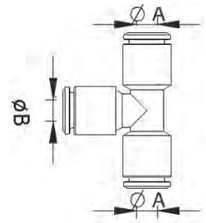

Part No.	Ø A	Ø B	
MST04	4	4	10
MST06	6	6	10
MST08	8	8	10

PU - Push in Union Straight

Part No.	Ø A	Ø B		Weight (g)
PU 06	6	6	10	6,5

PG. – Push In Union Straight-Reducer

Part No.	Ø A	Ø B		Weight (g)
PG 06-04	6	4	10	6,5
PG 08-06	8	6	10	9

PZ. – Push In Union Cross

Part No.	Ø A	Ø B		Weight (g)
PZA 06	6	6	10	18

PP. – Push In Blanking Plug

Part No.	Ø A		Weight (g)
PP 04	4	10	0,3
PP 06	6	10	0,6

Manifolds p. 259
Fittings – G Thread with O-Ring p. 260
Push to Connect Fittings p. 261
Fitting – R Thread p. 262
Male Elbow – Flow Controller p. 263
Inline Flow Controller p. 263
Tubes p. 263

MSM-R - Push in Male Threaded Stud

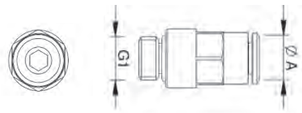

Part No.	Ø A	G1		Weight (g)
MSM04G1/8	4	R1/8	10	7,5
MSM04G1/8	6	R1/8	10	8
MSM04G1/4	6	R1/4	10	15
MSM04G1/4	8	R1/4	10	14

Material: Technopolymer / Brass (Nickel Plated).
Pressure: Max 10 bar.
Temperature: 0°C to +60°C.

MSTY-R - Push in Male Threaded Y

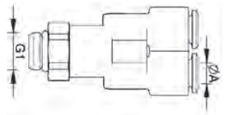

Part No.	Ø A	G1		Weight (g)
MSTY04G1/8	4	R1/8	10	13
MSTY06G1/8	6	R1/8	10	15
MSTY06G1/4	6	R1/4	10	22

MSW-R - Push in Male Threaded Elbow

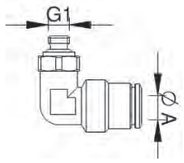

Part No.	Ø A	G1		Weight (g)
MSW04R1/8	4	R1/8	10	10
MSW06R1/8	6	R1/8	10	11
MSW06R1/4	6	R1/4	10	19
MSW08R1/4	8	R1/4	10	20

MSA-R - Push in Male Threaded Branch T

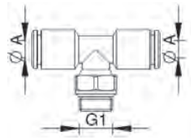

Part No.	Ø A	G1		Weight (g)
MSA04R1/8	4	R1/8	10	13
MSA06R1/8	6	R1/8	10	14
MSA06R1/4	6	R1/4	10	22
MSA08R1/4	8	R1/4	10	25

Manifolds p. 259
Fittings – G Thread with O-Ring p. 260
Push to Connect Fittings p. 261
Fitting – R Thread p. 262
Male Elbow – Flow Controller p. 263
Inline Flow Controller p. 263
Tubes p. 263

JSC-B - Push in Male Elbow Flow Control - in Valve

Part No.	ØA	Thread	Control		Weight (g)
JSCM5-G04B	4	M5	Supply	10	9
JSCM5-G06B	6	M5	Supply	10	10
JSC06-G01B	6	G1/8	Supply	10	20

JSC - Push in Male Elbow Flow Control - out Valve

Part No.	ØA	Thread	Control		Weight (g)
JSC M5-G04	4	M5	Exhaust	10	9
JSC M5-G06	6	M5	Exhaust	10	10
JSC 06-G01	6	G1/8	Exhaust	10	20

PA - Push in inline Flow Controller

Part No.	ØA	Contol		Weight (g)
PA 04	4	In-line	10	12
PA 06	6	In-line	10	33

PPU - Tubing

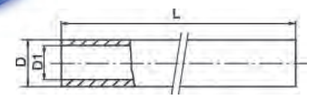

Part No.	D (mm)	D1 (mm)	Working pressure	Bend radius	Coil Length L
PPU4B	4	2,5	Max 10 bar	20 mm.	25 m.
PPU6B	6	4	Max 10 bar	30 mm.	25 m.
PPU8B	8	6	Max 10 bar	31 mm.	25 m.

265 Cable Connectors

266 Magnetic Sensors for C Slots

268 Magnetic Sensors for T Slots

268 Programmable Sensors for C Slots

269 Inductive Sensors

269 Sensor Boxes

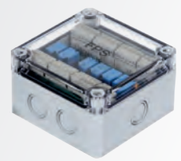

Cable Connectors	**p. 265**	Programmable Sensors for C Slots	p. 268
Magnetic Sensors for C Slots	p. 266	Inductive Sensors	p. 269
Magnetic Sensors for T Slots	p. 268	Sensor Boxes	p. 269

CB. – M8 Screw-on Cable Connectors

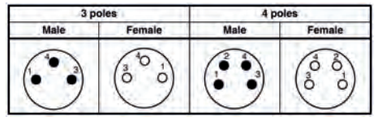

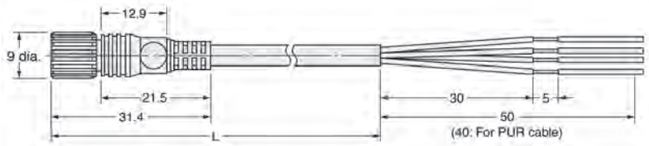

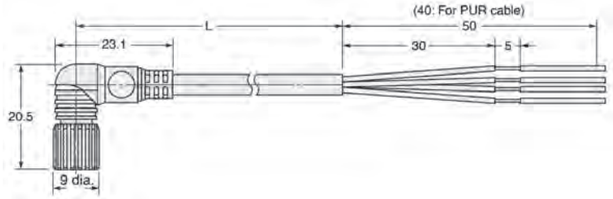

Part No.	Connector Type	Size	No. of Cable Cores.	Cable Length
CB.XS3F.M83S5M	Straight	M8	3 - wire	5
CB.XS3F.M83E5M	Elbow	M8	3 - wire	5
CB.XS3F.M84S5M	Straight	M8	4 - wire	5
CB.XS3F.M84E5M	Elbow	M8	4 - wire	5

Cable Connectors	p. 265	Programmable Sensors for C Slots	p. 268
Magnetic Sensors for C Slots	**p. 266**	Inductive Sensors	p. 269
Magnetic Sensors for T Slots	p. 268	Sensor Boxes	p. 269

SN. – Sensor for GZ12-10, GZ.AA, GZ.2016, CC.

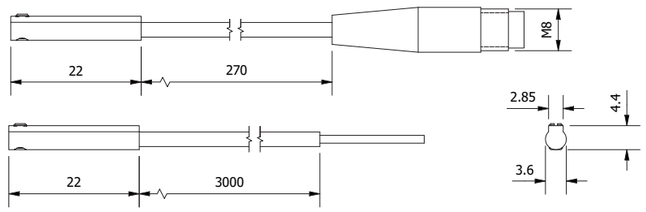

Part No.	Output	Sensor type	Connector	Lead - m	Weight (g)
SN.K5P.M8	PNP	Electronic	M8 3pin	0,3	4
SN.K5N.M8	NPN	Electronic	M8 3pin	0,3	4
SN.K5P.3MW	PNP	Electronic		3	4
SN.K5N.3MW	NPN	Electronic		3	4

SN. – Sensor for GF.

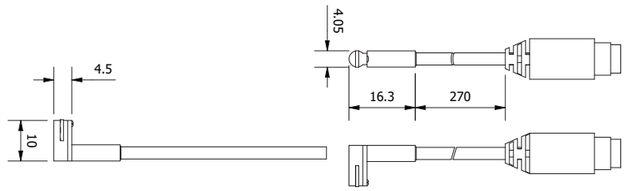

Part No.	Output	Sensor type	Connector	Lead - m	Weight (g)
SN.K3P.M8	PNP	Electronic	M8 3pin	0,3	4
SN.K3N.M8	NPN	Electronic	M8 3pin	0,3	4
SN.K3P.3MW	PNP	Electronic		3	4
SN.K3N.3MW	NPN	Electronic		3	4

SN – Sensor for Short Stroke & Mini Cylinders

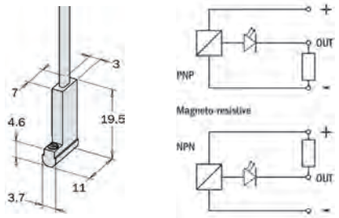

Part No.	Output	Sensor Type	Connector	Lead - m	Ref.	Weight (g)
SN.3N203-G	PNP	Magnetoresistive NO	M8 -3 pin	0,3	MP.OFL/OFC	4
SN.3M203-G	NPN	Magnetoresistive NO	M8 -3 pin	0,3	MP.OFL/OFC	4
SN.4N225-G	PNP	Magnetoresistive NO		2,5	MP.OFL/OFC	22
SN.4M225-G	NPN	Magnetoresistive NO		2,5	MP.OFL/OFC	22

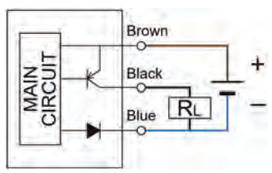

PNP

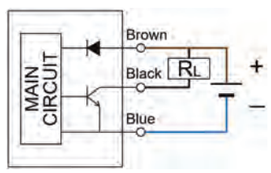

NPN

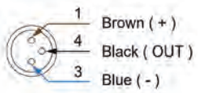

Cable Connectors	p. 265	Programmable Sensors for C Slots	p. 268
Magnetic Sensors for C Slots	**p. 266**	Inductive Sensors	p. 269
Magnetic Sensors for T Slots	p. 268	Sensor Boxes	p. 269

SS – Sensor for Short Stroke & Mini Cylinders

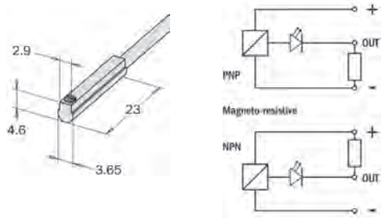

Part No.	Output	Sensor Type	Connector	Lead - m	Weight (g)
SS.3N203-G	PNP	Magnetoresistive NO	M8 -3 pin	0,3	4
SS.3M203-G	NPN	Magnetoresistive NO	M8 -3 pin	0,3	4
SS.4N225-G	PNP	Magnetoresistive NO		2,5	22
SS.4M225-G	NPN	Magnetoresistive NO		2,5	22

SMB.L – Sensor Mounting Bracket

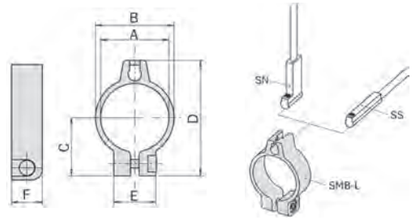

Part No.	A mm	B mm	C mm	D mm	E mm	F mm	Ref.	Weight (g)
SMB.14.L	Ø14	16,8	13,5	27,3	12,3	9	MP.OF 14	2
SMB.20.L	Ø20	23	17	33,8	12,3	9	MP.OF 20	2,5
SMB.30.L	Ø30	33,2	23	44,8	12,3	9	MP.OF 30	3

SN.DMSH – C-Slot Sensors

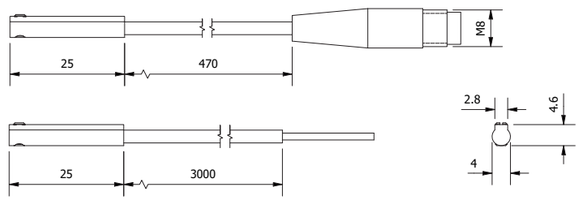

Part No.	Output	Sensor type	Connector	Lead m	Ref.	Weight (g)
SN.DMSHPM8	PNP	Electronic	M8 3pin	0.5	PG	4
SN.DMSHNM8	NPN	Electronic	M8 3pin	0.5	PG	4
SN.DMSHP3M	PNP	Electronic		3	PG	4
SN.DMSHN3M	NPN	Electronic		3	PG	4

Cable Connectors p. 265
Magnetic Sensors for C Slots p. 266
Magnetic Sensors for T Slots p. 268
Programmable Sensors for C Slots p. 268
Inductive Sensors p. 269
Sensor Boxes p. 269

SN.DMSG. – T-Slot Sensors

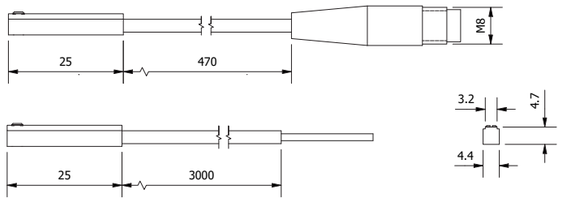

Part No.	Output	Sensor type	Connector	Lead m	Ref.	Weight (g)
SN.DMSGP.M8	PNP	Magnetic	M8 3pin	0.5	PG/AG/CCTQ/CCAQ	4
SN.DMSGN.M8	NPN	Magnetic	M8 3pin	0.5	PG/AG/CCTQ/CCAQ	4
SN.DMSGP.3M	PNP	Magnetic		3	PG/AG/CCTQ/CCAQ	4
SN.DMSGN.3M	NPN	Magnetic		3	PG/AG/CCTQ/CCAQ	4

PRO.SN-HS – Programmable Magnetic Sensor for MP.SGP-

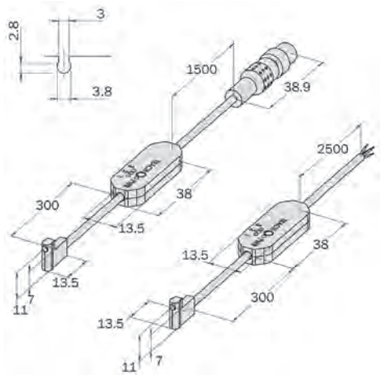

Part No.	Output	Sensor Type	Connector	Lead - m	Ref.	Weight (g)
PRO.SN3N215HS-G	PNP	Magnetoresistive NO/NC	M8 -3 pin	0,3	MP.SGP	70
PRO.SN3M215HS-G	NPN	Magnetoresistive NO/NC	M8 -3 pin	0,3	MP.SGP	70
PRO.SN4N225HS-G	PNP	Magnetoresistive NO/NC		2,5	MP.SGP	70
PRO.SN4M225HS-G	NPN	Magnetoresistive NO/NC		2,5	MP.SGP	70

Programmable GMP magnetoresistive sensors.
3 independent digital outputs.
Each programmable output in NO or NC logic.

General connection - 3 Wire

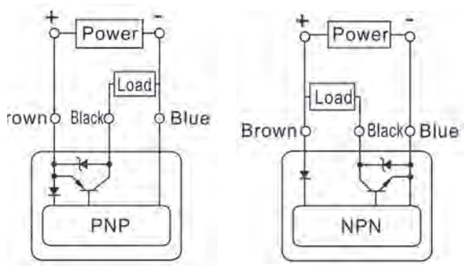

M8 socket

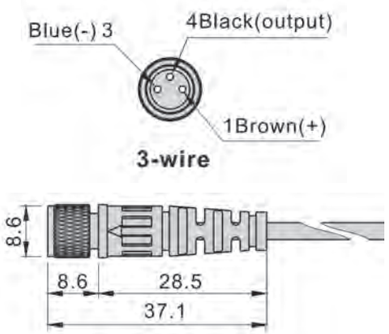

End of Arm Tooling | Electronics & Sensors *Sensors*

Cable Connectors p. 265
Magnetic Sensors for C Slots p. 266
Magnetic Sensors for T Slots p. 268
Programmable Sensors for C Slots p. 268
Inductive Sensors p. 269
Sensor Boxes p. 269

GZ-SCP – Sensor for GZ-10-8, 12-10

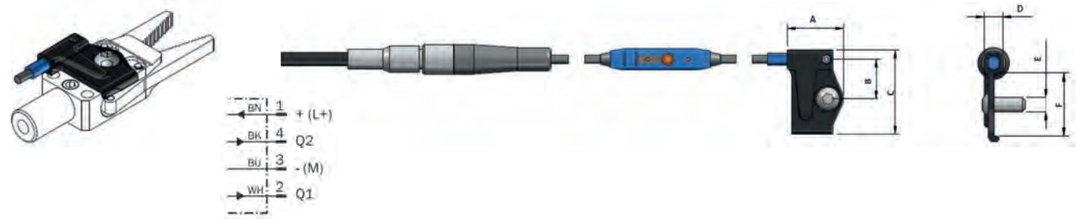

Part No.	Output	Sensor Type	Sensing Distance	Connector	Weight (g)
GZ-SCP-10-8	PNP	Magnetic	0-50mm	M8 4pin	65
GZ-SCP-12-10	PNP	Magnetic	0-50mm	M8 4pin	65

GZ20. – Inductive Sensor for GZ 20

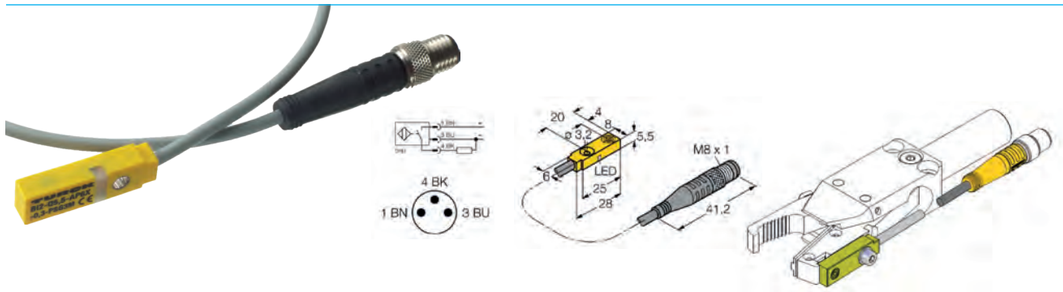

Part No.	Type	Cable length	Connection
GZ20.SM8.PNP	PNP	300	M8
GZ20.SM8.NPN	NPN	300	M8

SNB. – Sensor Box

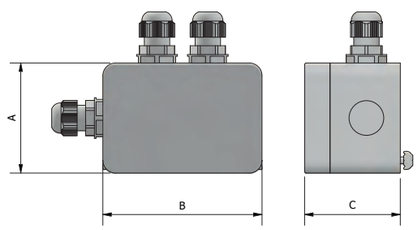

Part No.	Power supply	Max. # of Sensors	A	B	C
SNB.02C	24V dc (+/- 10%)	2	45	100	45
SNB.04C	"	4	65	94	57
SNB.06C	"	6	94	94	57
SNB.08C	"	8	94	130	57
SNB.12C	"	12	94	180	57

- Used for sensor wiring on an EOAT
- PNP and NPN signals can be converted.
- I/O can be current sourcing (PNP), sinking (NPN) or dry contact.
- Sensor boxes can be connected in series.
- LED indicators allow for easy trouble shooting.
- Programming method - jump wire.
- Provided with strain reliefs and fastening set.

271 Removable Nozzle Tips MOULDPRO Type

275 OEM Nozzle Tips Arburg Type

277 OEM Nozzle Tips Fanuc Type

278 OEM Nozzle Tips Demag Type

279 OEM Nozzle Tips Engel Type

280 Custom Order Forms

288 Screw Tips

289 Tip Spanner

Removable Nozzle Tips – MOULDPRO Type	**p. 271**	OEM Nozzle Tips – Engel Type	p. 279
OEM Nozzle Tips – Arburg Type	p. 275	Custom Order Forms	p. 280
OEM Nozzle Tips – Fanuc Type	p. 277	Screw Tips	p. 288
OEM Nozzle Tips – Demag Type	p. 278	Tip Spanner	p. 289

The MOULDPRO Removable Nozzle Tip System saves Time and Money!

The Quick Change nozzle tip system was developed to offer a fast an economical solution for injection moulders to adapt their moulding machines to different tools and materials.

By replacing the manufacturers nozzle body with the MOULDPRPO replaceable tip design the moulder can benefit from using MOULDPRO standard 'quick change' replaceable tips.

The tips are available in different lengths, with different tip radius and orifice; the tips are available as General Purpose / Nylon Reverse Taper or ABS Full Taper.

- High Quality
- Hardened Tool Steel
- All Standard Sizes in Stock
- Standardise your factory and Save Money
- Standardise Size of Nozzle Heater Bands
- Custom designs available

Removable Nozzle Tips – MOULDPRO Type	**p. 271**	OEM Nozzle Tips – Engel Type	p. 279
OEM Nozzle Tips – Arburg Type	p. 275	Custom Order Forms	p. 280
OEM Nozzle Tips – Fanuc Type	p. 277	Screw Tips	p. 288
OEM Nozzle Tips – Demag Type	p. 278	Tip Spanner	p. 289

Removable Nozzle Tips, Mouldpro Style

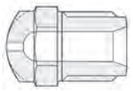
Universal

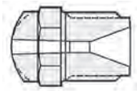
Nylon

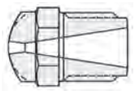
ABS

Length 38 mm.					
Universal	**Nylon**	**ABS**	**Thread Type**	**Radius**	**Orifice Ø**
GP1-R12.7-1.5					1,5
GP1-R12.7-2					2
GP1-R12.7-2.5					2,5
GP1-R12.7-3	**NRT1-R12.7-3**	**FT1-R12.7-3**		12,7	3
GP1-R12.7-4	**NRT1-R12.7-4**	**FT1-R12.7-4**			4
GP1-R12.7-5	**NRT1-R12.7-5**	**FT1-R12.7-5**			5
GP1-R12.7-6.5	**NRT1-R12.7-6.5**	**FT1-R12.7-6.5**			6,5
GP1-R12.7-8	**NRT1-R12.7-8**	**FT1-R12.7-8**			8
GP1-R15-1.5					1,5
GP1-R15-2.5					2,5
GP1-R15-3	**NRT1-R15-3**	**FT1-R15-3**			3
GP1-R15-4	**NRT1-R15-4**	**FT1-R15-4**			4
GP1-R15-5	**NRT1-R15-5**	**FT1-R15-5**		15	5
GP1-R15-5.5	**NRT1-R15-5.5**	**FT1-R15-5.5**			5,5
GP1-R15-6.5	**NRT1-R15-6.5**	**FT1-R15-6.5**	7/8” UNF		6,5
GP1-R15-7	**NRT1-R15-7**	**FT1-R15-7**			7
GP1-R15-8	**NRT1-R15-8**	**FT1-R15-8**			8
GP1-R15-9.5	**NRT1-R15-9.5**	**FT1-R15-9.5**			9,5
GP1-R19-3	**NRT1-R19-3**	**FT1-R19-3**			3
GP1-R19-4	**NRT1-R19-4**	**FT1-R19-4**		19	4
GP1-R19-5.5	**NRT1-R19-5.5**	**FT1-R19-5.5**			5,5
GP1-R30-3	**NRT1-R30-3**	**FT1-R30-3**		30	3
GP1-C90-1,5					1,5
GP1-C90-2,5					2,5
GP1-C90-3	**NRT2-C90-3**	**FT1-C90-3**			3
GP1-C90-4	**NRT2-C90-4**	**FT1-C90-4**		C90	4
GP1-C90-5	**NRT2-C90-5**	**FT1-C90-5**			5
GP1-C90-6		**FT1-C90-6**			6
GP1-C90-8		**FT1-C90-8**			8

Removeable Nozzle tips, Heat Treated Tool Steel, Polished Radius and Bore.

Radius options:

End of Barrel | Removable Nozzle Tips *MOULDPRO Type*

Removable Nozzle Tips – MOULDPRO Type	**p. 271**	OEM Nozzle Tips – Engel Type	p. 279
OEM Nozzle Tips – Arburg Type	p. 275	Custom Order Forms	p. 280
OEM Nozzle Tips – Fanuc Type	p. 277	Screw Tips	p. 288
OEM Nozzle Tips – Demag Type	p. 278	Tip Spanner	p. 289

Removable Nozzle Tips, Mouldpro Style

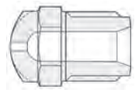
Universal

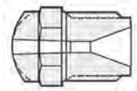
Nylon

Length 70 mm.		Length 95 mm.		Length 127 mm.				
Universal	**Nylon**	**Universal**	**Nylon**	**Universal**	**Nylon**	**Thread Type**	**Radius**	**Orifice Ø**
GP2-R12.7-1.5		**GP3-R12.7-1.5**		**GP4-R12.7-1.5**				1,5
GP2-R12.7-2		**GP3-R12.7-2**		**GP4-R12.7-2**				2
GP2-R12.7-2.5		**GP3-R12.7-2.5**		**GP4-R12.7-2.5**				2,5
GP2-R12.7-3	**NRT2-R12.7-3**	**GP3-R12.7-3**	**NRT3-R12.7-3**	**GP4-R12.7-3**	**NRT4-R12.7-3**		12,7	3
GP2-R12.7-4	**NRT2-R12.7-4**	**GP3-R12.7-4**	**NRT3-R12.7-4**	**GP4-R12.7-4**	**NRT4-R12.7-4**			4
GP2-R12.7-5	**NRT2-R12.7-5**	**GP3-R12.7-5**	**NRT3-R12.7-5**	**GP4-R12.7-5**	**NRT4-R12.7-5**			5
GP2-R12.7-6.5	**NRT2-R12.7-6.5**	**GP3-R12.7-6.5**	**NRT3-R12.7-6.5**	**GP4-R12.7-6.5**	**NRT4-R12.7-6.5**			6,5
GP2-R12.7-8	**NRT2-R12.7-8**	**GP3-R12.7-8**	**NRT3-R12.7-8**	**GP4-R12.7-8**	**NRT4-R12.7-8**			8
GP2-R15-1.5		**GP3-R15-1.5**		**GP4-R15-1.5**				1,5
GP2-R15-2.5		**GP3-R15-2.5**		**GP4-R15-2.5**				2,5
GP2-R15-3	**NRT2-R15-3**	**GP3-R15-3**	**NRT3-R15-3**	**GP4-R15-3**	**NRT4-R15-3**			3
GP2-R15-4	**NRT2-R15-4**	**GP3-R15-4**	**NRT3-R15-4**	**GP4-R15-4**	**NRT4-R15-4**			4
GP2-R15-5	**NRT2-R15-5**	**GP3-R15-5**	**NRT3-R15-5**	**GP4-R15-5**	**NRT4-R15-5**		15	5
GP2-R15-5.5	**NRT2-R15-5.5**	**GP3-R15-5.5**	**NRT3-R15-5.5**	**GP4-R15-5.5**	**NRT4-R15-5.5**			5,5
GP2-R15-6.5	**NRT2-R15-6.5**	**GP3-R15-6.5**	**NRT3-R15-6.5**	**GP4-R15-6.5**	**NRT4-R15-6.5**	7/8” UNF		6,5
GP2-R15-7	**NRT2-R15-7**	**GP3-R15-7**	**NRT3-R15-7**	**GP4-R15-7**	**NRT4-R15-7**			7
GP2-R15-8	**NRT2-R15-8**	**GP3-R15-8**	**NRT3-R15-8**	**GP4-R15-8**	**NRT4-R15-8**			8
GP2-R15-9.5	**NRT2-R15-9.5**	**GP3-R15-9.5**	**NRT3-R15-9.5**	**GP4-R15-9.5**	**NRT4-R15-9.5**			9,5
GP2-R19-3	**NRT2-R19-3**	**GP3-R19-3**	**NRT3-R19-3**	**GP4-R19-3**	**NRT4-R19-3**			3
GP2-R19-4	**NRT2-R19-4**	**GP3-R19-4**	**NRT3-R19-4**	**GP4-R19-4**	**NRT4-R19-4**		19	4
GP2-R19-5.5	**NRT2-R19-5.5**	**GP3-R19-5.5**	**NRT3-R19-5.5**	**GP4-R19-5.5**	**NRT4-R19-5.5**			5,5
GP2-R30-3	**NRT2-R30-3**	**GP3-R30-3**	**NRT3-R30-3**	**GP4-R30-3**	**NRT4-R30-3**		30	3
GP2-C90-1,5		**GP3-C90-1,5**		**GP4-C90-1,5**				1,5
GP2-C90-2,5		**GP3-C90-2,5**		**GP4-C90-2,5**				2,5
GP2-C90-3	**NRT2-C90-3**	**GP3-C90-3**	**NRT3-C90-3**	**GP4-C90-3**	**NRT4-C90-3**			3
GP2-C90-4	**NRT2-C90-4**	**GP3-C90-4**	**NRT3-C90-4**	**GP4-C90-4**	**NRT4-C90-4**		C90	4
GP2-C90-5	**NRT2-C90-5**	**GP3-C90-5**	**NRT3-C90-5**	**GP4-C90-5**	**NRT4-C90-5**			5
GP2-C90-6		**GP3-C90-6**		**GP4-C90-6**				6
GP2-C90-8		**GP3-C90-8**		**GP4-C90-8**				8

Removeable Nozzle tips, Heat Treated Tool Steel, Polished Radius and Bore.

Radius options:

REMOVABLE NOZZLE TIPS, MOULDPRO STYLE
Order form

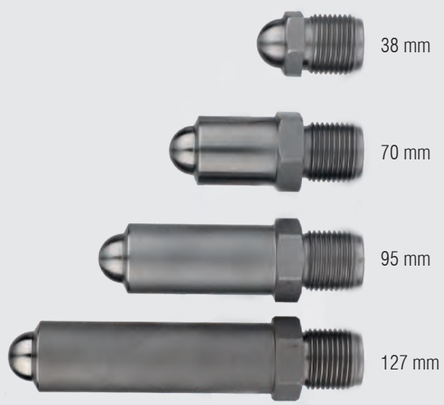

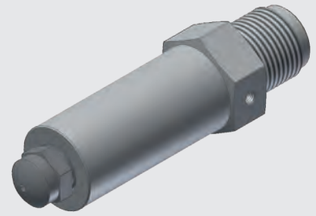

Order your tip:
Only for removable tip nozzle standard BMS

Create a reference using 4 criterias:
Type, lenght, radius and opening.

(1) Type

- ☐ Universel (GP)
- ☐ Polyamid (NRT)
- ☐ ABS (FT1)

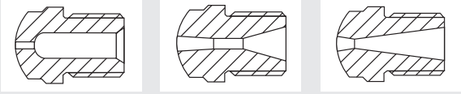

FT1 & NRT : Opening mini : 3mm

(2) Tip length

- ☐ 38 mm (1)
- ☐ 70 mm (2)
- ☐ 95 mm (3)
- ☐ 127 mm (4)

Length 70, 95 & 127mm are not available in ABS version

(3) Radius

- ☐ 35 mm
- ☐ 30 mm
- ☐ 19 mm
- ☐ 15 mm
- ☐ 12,7 mm
- ☐ 10 mm
- ☐ 9 mm
- ☐ 120°
- ☐ 90°
- ☐ 70°
- ☐ 60°
- ☐ Other

(4) Opening

- ☐ 1,5 mm
- ☐ 2 mm
- ☐ 2,5 mm
- ☐ 3 mm
- ☐ 4 mm
- ☐ 5 mm
- ☐ 5.5 mm
- ☐ 6 mm
- ☐ 6.5 mm
- ☐ 7 mm
- ☐ 8 mm
- ☐ 9,5 mm
- ☐ Other

GP	1	R15	3

Example: GP1-R15-3
Universal type (GP) - Tip lenght 38mm (1) - Radius 15mm (R15) - Opening 3 mm (3)

If you want a non-standart radius and opening, use the genericreference GP1 and specify your radius and opening.

Removable Nozzle Tips – MOULDPRO Type	p. 271	OEM Nozzle Tips – Engel Type	p. 279
OEM Nozzle Tips – Arburg Type	**p. 275**	Custom Order Forms	p. 280
OEM Nozzle Tips – Fanuc Type	p. 277	Screw Tips	p. 288
OEM Nozzle Tips – Demag Type	p. 278	Tip Spanner	p. 289

OEM Nozzle Tips, Arburg Style

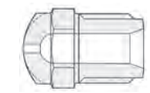
Universal
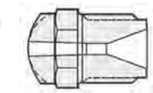
Nylon

Length 50 mm.		Lenght 75 mm.		Length 95 mm.					
Universal	Nylon	Universal	Nylon	Universal	Nylon	Thread	Rear Opening	Radius	Orifice Ø
AGP1-12,7-1,5		AGP2-12,7-1,5		AGP3-12,7-1,5		M24x1,5	8 mm.	12,7	1,5
AGP1-12,7-2,5		AGP2-12,7-2,5		AGP3-12,7-2,5					2,5
AGP1-12,7-3	ARNT1-12,7-3	AGP2-12,7-3	ARNT2-12,7-3	AGP3-12,7-3	ARNT3-12,7-3				3
AGP1-12,7-4	ARNT1-12,7-4	AGP2-12,7-4	ARNT2-12,7-4	AGP3-12,7-4	ARNT3-12,7-4				4
AGP1-12,7-5	ARNT1-12,7-5	AGP2-12,7-5	ARNT2-12,7-5	AGP3-12,7-5	ARNT3-12,7-5				5
AGP1-12,7-6	ARNT1-12,7-6	AGP2-12,7-6	ARNT2-12,7-6	AGP3-12,7-6					6
AGP1-12,7-8		AGP2-12,7-8	ARNT2-12,7-8						8
AGP1-15-1,5		AGP2-15-1,5		AGP3-15-1,5				15	1,5
AGP1-15-2,5		AGP2-15-2,5		AGP3-15-2,5					2,5
AGP1-15-3	ARNT1-15-3	AGP2-15-3	ARNT2-15-3	AGP3-15-3	ARNT3-15-3				3
AGP1-15-4	ARNT1-15-4	AGP2-15-4	ARNT2-15-4	AGP3-15-4	ARNT3-15-4				4
AGP1-15-5	ARNT1-15-5	AGP2-15-5		AGP3-15-5	ARNT3-15-5				5
AGP1-15-6	ARNT1-15-6	AGP2-15-6	ARNT2-15-6						6
AGP1-19-1,5		AGP2-19-1,5		AGP3-19-1,5				19	1,5
AGP1-19-2,5		AGP2-19-2,5		AGP3-19-2,5					2,5
AGP1-19-3	ARNT1-19-3	AGP2-19-3	ARNT2-19-3	AGP3-19-3	ARNT3-19-3				3
AGP1-19-4	ARNT1-19-4	AGP2-19-4		AGP3-19-6					4
AGP1-19-6	ARNT1-19-6	AGP2-19-6							6

Radius options:

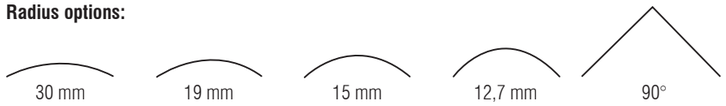

Removable Nozzle Tips – MOULDPRO Type p. 271
OEM Nozzle Tips – Arburg Type p. 275
OEM Nozzle Tips – Fanuc Type p. 277
OEM Nozzle Tips – Demag Type p. 278
OEM Nozzle Tips – Engel Type p. 279
Custom Order Forms p. 280
Screw Tips p. 288
Tip Spanner p. 289

OEM Nozzle Tips, Arburg Style, 12 mm. Rear Opening

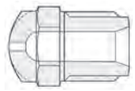
Universal

Length 50 mm.	Lenght 75 mm.				
Part No.	Part No.	Thread	Rear Opening	Radius	Orifice ø
NSAR1-R12,7-1,5	NSAR3-R12,7-1,5	M36x2	12 mm.	12,7	1,5
NSAR1-R12,7-2	NSAR3-R12,7-2				2
NSAR1-R12,7-2,5	NSAR3-R12,7-2,5				2,5
NSAR1-R12,7-3	NSAR3-R12,7-3				3
NSAR1-R12,7-4	NSAR3-R12,7-4				4
NSAR1-R12,7-5	NSAR3-R12,7-5				5
NSAR1-R12,7-5,5	NSAR3-R12,7-5,5				5,5
NSAR1-R12,7-6	NSAR3-R12,7-6				6
NSAR1-R12,7-6,5	NSAR3-R12,7-6,5				6,5
NSAR1-R12,7-7	NSAR3-R12,7-7				7
NSAR1-R12,7-8	NSAR3-R12,7-8				8
NSAR1-R12,7-9,5	NSAR3-R12,7-9,5				9,5
NSAR1-R15-1,5	NSAR3-R15-1,5			15	1,5
NSAR1-R15-2	NSAR3-R15-2				2
NSAR1-R15-2,5	NSAR3-R15-2,5				2,5
NSAR1-R15-3	NSAR3-R15-3				3
NSAR1-R15-4	NSAR3-R15-4				4
NSAR1-R15-5	NSAR3-R15-5				5
NSAR1-R15-5,5	NSAR3-R15-5,5				5,5
NSAR1-R15-6	NSAR3-R15-6				6
NSAR1-R15-6,5	NSAR3-R15-6,5				6,5
NSAR1-R15-7	NSAR3-R15-7				7
NSAR1-R15-8	NSAR3-R15-8				8
NSAR1-R15-9,5	NSAR3-R15-9,5				9,5
NSAR1-R19-1,5	NSAR3-R19-1,5			19	1,5
NSAR1-R19-2	NSAR3-R19-2				2
NSAR1-R19-2,5	NSAR3-R19-2,5				2,5
NSAR1-R19-3	NSAR3-R19-3				3
NSAR1-R19-4	NSAR3-R19-4				4
NSAR1-R19-5	NSAR3-R19-5				5
NSAR1-R19-5,5	NSAR3-R19-5,5				5,5
NSAR1-R19-6	NSAR3-R19-6				6
NSAR1-R19-6,5	NSAR3-R19-6,5				6,5
NSAR1-R19-7	NSAR3-R19-7				7
NSAR1-R19-8	NSAR3-R19-8				8
NSAR1-R19-9,5	NSAR3-R19-9,5				9,5
NSAR1-R30-1,5	NSAR3-R30-1,5			30	1,5
NSAR1-R30-2	NSAR3-R30-2				2
NSAR1-R30-2,5	NSAR3-R30-2,5				2,5
NSAR1-R30-3	NSAR3-R30-3				3
NSAR1-R30-4	NSAR3-R30-4				4
NSAR1-R30-5	NSAR3-R30-5				5
NSAR1-R30-5,5	NSAR3-R30-5,5				5,5
NSAR1-R30-6	NSAR3-R30-6				6
NSAR1-R30-6,5	NSAR3-R30-6,5				6,5
NSAR1-R30-7	NSAR3-R30-7				7
NSAR1-R30-8	NSAR3-R30-8				8
NSAR1-R30-9,5	NSAR3-R30-9,5				9,5

Radius options:

Removable Nozzle Tips – MOULDPRO Type p. 271
OEM Nozzle Tips – Arburg Type p. 275
OEM Nozzle Tips – Fanuc Type p. 277
OEM Nozzle Tips – Demag Type p. 278
OEM Nozzle Tips – Engel Type p. 279
Custom Order Forms p. 280
Screw Tips p. 288
Tip Spanner p. 289

OEM Nozzle Tips, Fanuc Style

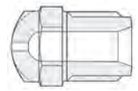
Universal

Length 38 mm.	Lenght 70 mm.			
Part No.	Part No.	Thread Type	Radius	Orifice Ø
FU1-R12,7-1,5	FU2-R12,7-1,5	M24x2	12,7	1,5
FU1-R12,7-2	FU2-R12,7-2			2
FU1-R12,7-2,5	FU2-R12,7-2,5			2,5
FU1-R12,7-3	FU2-R12,7-3			3
FU1-R12,7-4	FU2-R12,7-4			4
FU1-R12,7-5	FU2-R12,7-5			5
FU1-R12,7-5,5	FU2-R12,7-5,5			5,5
FU1-R12,7-6	FU2-R12,7-6			6
FU1-R12,7-6,5	FU2-R12,7-6,5			6,5
FU1-R12,7-7	FU2-R12,7-7			7
FU1-R12,7-8	FU2-R12,7-8			8
FU1-R12,7-9,5	FU2-R12,7-9,5			9,5
FU1-R15-1,5	FU2-R15-1,5		15	1,5
FU1-R15-2	FU2-R15-2			2
FU1-R15-2,5	FU2-R15-2,5			2,5
FU1-R15-3	FU2-R15-3			3
FU1-R15-4	FU2-R15-4			4
FU1-R15-5	FU2-R15-5			5
FU1-R15-5,5	FU2-R15-5,5			5,5
FU1-R15-6	FU2-R15-6			6
FU1-R15-6,5	FU2-R15-6,5			6,5
FU1-R15-7	FU2-R15-7			7
FU1-R15-8	FU2-R15-8			8
FU1-R15-9,5	FU2-R15-9,5			9,5
FU1-R19-1,5	FU2-R19-1,5		19	1,5
FU1-R19-2	FU2-R19-2			2
FU1-R19-2,5	FU2-R19-2,5			2,5
FU1-R19-3	FU2-R19-3			3
FU1-R19-4	FU2-R19-4			4
FU1-R19-5	FU2-R19-5			5
FU1-R19-5,5	FU2-R19-5,5			5,5
FU1-R19-6	FU2-R19-6			6
FU1-R19-6,5	FU2-R19-6,5			6,5
FU1-R19-7	FU2-R19-7			7
FU1-R19-8	FU2-R19-8			8
FU1-R19-9,5	FU2-R19-9,5			9,5
FU1-R30-1,5	FU2-R30-1,5		30	1,5
FU1-R30-2	FU2-R30-2			2
FU1-R30-2,5	FU2-R30-2,5			2,5
FU1-R30-3	FU2-R30-3			3
FU1-R30-4	FU2-R30-4			4
FU1-R30-5	FU2-R30-5			5
FU1-R30-5,5	FU2-R30-5,5			5,5
FU1-R30-6	FU2-R30-6			6
FU1-R30-6,5	FU2-R30-6,5			6,5
FU1-R30-7	FU2-R30-7			7
FU1-R30-8	FU2-R30-8			8
FU1-R30-9,5	FU2-R30-9,5			9,5

Radius options:

Removable Nozzle Tips – MOULDPRO Type p. 271
OEM Nozzle Tips – Arburg Type p. 275
OEM Nozzle Tips – Fanuc Type p. 277
OEM Nozzle Tips – Demag Type p. 278
OEM Nozzle Tips – Engel Type p. 279
Custom Order Forms p. 280
Screw Tips p. 288
Tip Spanner p. 289

OEM Nozzle Tips, Demag Style

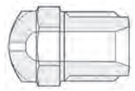

Universal

Length 50 mm.	Lenght 73 mm.	Lenght 100 mm.			
Part No.	Part No.	Part No.	Thread Type	Radius	Orifice Ø
DNDS50-R12,7-1,5	DNDS73-R12,7-1,5	DNDS100-R12,7-1,5	M24x1,5	12,7	1,5
DNDS50-R12,7-2	DNDS73-R12,7-2	DNDS100-R12,7-2			2
DNDS50-R12,7-2,5	DNDS73-R12,7-2,5	DNDS100-R12,7-2,5			2,5
DNDS50-R12,7-3	DNDS73-R12,7-3	DNDS100-R12,7-3			3
DNDS50-R12,7-4	DNDS73-R12,7-4	DNDS100-R12,7-4			4
DNDS50-R12,7-5	DNDS73-R12,7-5	DNDS100-R12,7-5			5
DNDS50-R12,7-5,5	DNDS73-R12,7-5,5	DNDS100-R12,7-5,5			5,5
DNDS50-R12,7-6	DNDS73-R12,7-6	DNDS100-R12,7-6			6
DNDS50-R12,7-6,5	DNDS73-R12,7-6,5	DNDS100-R12,7-6,5			6,5
DNDS50-R12,7-7	DNDS73-R12,7-7	DNDS100-R12,7-7			7
DNDS50-R12,7-8	DNDS73-R12,7-8	DNDS100-R12,7-8			8
DNDS50-R12,7-9,5	DNDS73-R12,7-9,5	DNDS100-R12,7-9,5			9,5
DNDS50-R15-1,5	DNDS73-R15-1,5	DNDS100-R15-1,5		15	1,5
DNDS50-R15-2	DNDS73-R15-2	DNDS100-R15-2			2
DNDS50-R15-2,5	DNDS73-R15-2,5	DNDS100-R15-2,5			2,5
DNDS50-R15-3	DNDS73-R15-3	DNDS100-R15-3			3
DNDS50-R15-4	DNDS73-R15-4	DNDS100-R15-4			4
DNDS50-R15-5	DNDS73-R15-5	DNDS100-R15-5			5
DNDS50-R15-5,5	DNDS73-R15-5,5	DNDS100-R15-5,5			5,5
DNDS50-R15-6	DNDS73-R15-6	DNDS100-R15-6			6
DNDS50-R15-6,5	DNDS73-R15-6,5	DNDS100-R15-6,5			6,5
DNDS50-R15-7	DNDS73-R15-7	DNDS100-R15-7			7
DNDS50-R15-8	DNDS73-R15-8	DNDS100-R15-8			8
DNDS50-R15-9,5	DNDS73-R15-9,5	DNDS100-R15-9,5			9,5
DNDS50-R19-1,5	DNDS73-R19-1,5	DNDS100-R19-1,5		19	1,5
DNDS50-R19-2	DNDS73-R19-2	DNDS100-R19-2			2
DNDS50-R19-2,5	DNDS73-R19-2,5	DNDS100-R19-2,5			2,5
DNDS50-R19-3	DNDS73-R19-3	DNDS100-R19-3			3
DNDS50-R19-4	DNDS73-R19-4	DNDS100-R19-4			4
DNDS50-R19-5	DNDS73-R19-5	DNDS100-R19-5			5
DNDS50-R19-5,5	DNDS73-R19-5,5	DNDS100-R19-5,5			5,5
DNDS50-R19-6	DNDS73-R19-6	DNDS100-R19-6			6
DNDS50-R19-6,5	DNDS73-R19-6,5	DNDS100-R19-6,5			6,5
DNDS50-R19-7	DNDS73-R19-7	DNDS100-R19-7			7
DNDS50-R19-8	DNDS73-R19-8	DNDS100-R19-8			8
DNDS50-R19-9,5	DNDS73-R19-9,5	DNDS100-R19-9,5			9,5
DNDS50-R30-1,5	DNDS73-R30-1,5	DNDS100-R30-1,5		30	1,5
DNDS50-R30-2	DNDS73-R30-2	DNDS100-R30-2			2
DNDS50-R30-2,5	DNDS73-R30-2,5	DNDS100-R30-2,5			2,5
DNDS50-R30-3	DNDS73-R30-3	DNDS100-R30-3			3
DNDS50-R30-4	DNDS73-R30-4	DNDS100-R30-4			4
DNDS50-R30-5	DNDS73-R30-5	DNDS100-R30-5			5
DNDS50-R30-5,5	DNDS73-R30-5,5	DNDS100-R30-5,5			5,5
DNDS50-R30-6	DNDS73-R30-6	DNDS100-R30-6			6
DNDS50-R30-6,5	DNDS73-R30-6,5	DNDS100-R30-6,5			6,5
DNDS50-R30-7	DNDS73-R30-7	DNDS100-R30-7			7
DNDS50-R30-8	DNDS73-R30-8	DNDS100-R30-8			8
DNDS50-R30-9,5	DNDS73-R30-9,5	DNDS100-R30-9,5			9,5

Radius options:

Removable Nozzle Tips – MOULDPRO Type p. 271
OEM Nozzle Tips – Arburg Type p. 275
OEM Nozzle Tips – Fanuc Type p. 277
OEM Nozzle Tips – Demag Type p. 278
OEM Nozzle Tips – Engel Type p. 279
Custom Order Forms p. 280
Screw Tips p. 288
Tip Spanner p. 289

OEM Nozzle Tips, Engel Style

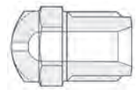

Universal

Length 90 mm.	Length 125 mm.	Length 90 mm.	Length 125 mm.			
8 mm. Rear Opening		12 mm. Rear Opening		Thread Type	Radius	Orifice Ø
EU90RO8-R12,7-1,5	EU125RO8-R12,7-1,5	EU90RO12-R12,7-1,5	EU125RO12-R12,7-1,5	M28x1,5	12,7	1,5
EU90RO8-R12,7-2	EU125RO8-R12,7-2	EU90RO12-R12,7-2	EU125RO12-R12,7-2			2
EU90RO8-R12,7-2,5	EU125RO8-R12,7-2,5	EU90RO12-R12,7-2,5	EU125RO12-R12,7-2,5			2,5
EU90RO8-R12,7-3	EU125RO8-R12,7-3	EU90RO12-R12,7-3	EU125RO12-R12,7-3			3
EU90RO8-R12,7-4	EU125RO8-R12,7-4	EU90RO12-R12,7-4	EU125RO12-R12,7-4			4
EU90RO8-R12,7-5	EU125RO8-R12,7-5	EU90RO12-R12,7-5	EU125RO12-R12,7-5			5
EU90RO8-R12,7-5,5	EU125RO8-R12,7-5,5	EU90RO12-R12,7-5,5	EU125RO12-R12,7-5,5			5,5
EU90RO8-R12,7-6	EU125RO8-R12,7-6	EU90RO12-R12,7-6	EU125RO12-R12,7-6			6
EU90RO8-R12,7-6,5	EU125RO8-R12,7-6,5	EU90RO12-R12,7-6,5	EU125RO12-R12,7-6,5			6,5
EU90RO8-R12,7-7	EU125RO8-R12,7-7	EU90RO12-R12,7-7	EU125RO12-R12,7-7			7
EU90RO8-R12,7-8	EU125RO8-R12,7-8	EU90RO12-R12,7-8	EU125RO12-R12,7-8			8
EU90RO8-R12,7-9,5	EU125RO8-R12,7-9,5	EU90RO12-R12,7-9,5	EU125RO12-R12,7-9,5			9,5
EU90RO8-R15-1,5	EU125RO8-R15-1,5	EU90RO12-R15-1,5	EU125RO12-R15-1,5		15	1,5
EU90RO8-R15-2	EU125RO8-R15-2	EU90RO12-R15-2	EU125RO12-R15-2			2
EU90RO8-R15-2,5	EU125RO8-R15-2,5	EU90RO12-R15-2,5	EU125RO12-R15-2,5			2,5
EU90RO8-R15-3	EU125RO8-R15-3	EU90RO12-R15-3	EU125RO12-R15-3			3
EU90RO8-R15-4	EU125RO8-R15-4	EU90RO12-R15-4	EU125RO12-R15-4			4
EU90RO8-R15-5	EU125RO8-R15-5	EU90RO12-R15-5	EU125RO12-R15-5			5
EU90RO8-R15-5,5	EU125RO8-R15-5,5	EU90RO12-R15-5,5	EU125RO12-R15-5,5			5,5
EU90RO8-R15-6	EU125RO8-R15-6	EU90RO12-R15-6	EU125RO12-R15-6			6
EU90RO8-R15-6,5	EU125RO8-R15-6,5	EU90RO12-R15-6,5	EU125RO12-R15-6,5			6,5
EU90RO8-R15-7	EU125RO8-R15-7	EU90RO12-R15-7	EU125RO12-R15-7			7
EU90RO8-R15-8	EU125RO8-R15-8	EU90RO12-R15-8	EU125RO12-R15-8			8
EU90RO8-R15-9,5	EU125RO8-R15-9,5	EU90RO12-R15-9,5	EU125RO12-R15-9,5			9,5
EU90RO8-R19-1,5	EU125RO8-R19-1,5	EU90RO12-R19-1,5	EU125RO12-R19-1,5		19	1,5
EU90RO8-R19-2	EU125RO8-R19-2	EU90RO12-R19-2	EU125RO12-R19-2			2
EU90RO8-R19-2,5	EU125RO8-R19-2,5	EU90RO12-R19-2,5	EU125RO12-R19-2,5			2,5
EU90RO8-R19-3	EU125RO8-R19-3	EU90RO12-R19-3	EU125RO12-R19-3			3
EU90RO8-R19-4	EU125RO8-R19-4	EU90RO12-R19-4	EU125RO12-R19-4			4
EU90RO8-R19-5	EU125RO8-R19-5	EU90RO12-R19-5	EU125RO12-R19-5			5
EU90RO8-R19-5,5	EU125RO8-R19-5,5	EU90RO12-R19-5,5	EU125RO12-R19-5,5			5,5
EU90RO8-R19-6	EU125RO8-R19-6	EU90RO12-R19-6	EU125RO12-R19-6			6
EU90RO8-R19-6,5	EU125RO8-R19-6,5	EU90RO12-R19-6,5	EU125RO12-R19-6,5			6,5
EU90RO8-R19-7	EU125RO8-R19-7	EU90RO12-R19-7	EU125RO12-R19-7			7
EU90RO8-R19-8	EU125RO8-R19-8	EU90RO12-R19-8	EU125RO12-R19-8			8
EU90RO8-R19-9,5	EU125RO8-R19-9,5	EU90RO12-R19-9,5	EU125RO12-R19-9,5			9,5
EU90RO8-R30-1,5	EU125RO8-R30-1,5	EU90RO12-R30-1,5	EU125RO12-R30-1,5		30	1,5
EU90RO8-R30-2	EU125RO8-R30-2	EU90RO12-R30-2	EU125RO12-R30-2			2
EU90RO8-R30-2,5	EU125RO8-R30-2,5	EU90RO12-R30-2,5	EU125RO12-R30-2,5			2,5
EU90RO8-R30-3	EU125RO8-R30-3	EU90RO12-R30-3	EU125RO12-R30-3			3
EU90RO8-R30-4	EU125RO8-R30-4	EU90RO12-R30-4	EU125RO12-R30-4			4
EU90RO8-R30-5	EU125RO8-R30-5	EU90RO12-R30-5	EU125RO12-R30-5			5
EU90RO8-R30-5,5	EU125RO8-R30-5,5	EU90RO12-R30-5,5	EU125RO12-R30-5,5			5,5
EU90RO8-R30-6	EU125RO8-R30-6	EU90RO12-R30-6	EU125RO12-R30-6			6
EU90RO8-R30-6,5	EU125RO8-R30-6,5	EU90RO12-R30-6,5	EU125RO12-R30-6,5			6,5
EU90RO8-R30-7	EU125RO8-R30-7	EU90RO12-R30-7	EU125RO12-R30-7			7
EU90RO8-R30-8	EU125RO8-R30-8	EU90RO12-R30-8	EU125RO12-R30-8			8
EU90RO8-R30-9,5	EU125RO8-R30-9,5	EU90RO12-R30-9,5	EU125RO12-R30-9,5			9,5

Radius options:

NOZZLE TIPS - OEM COMPATIBLE
Order form

Arburg Style

Demag Style

Engel Style

Fanuc Style

Order Your Machine-Compatible Nozzle Tip

Create a reference using 3 criterias:
Type, radius and opening.

Type

- ☐ **ARBURG, Universal**
  AGP1, AGP2, AGP3, NSAR1, NSAR3 (page 275-276)
- ☐ **ARBURG, Nylon cone**
  ARNT1, ARNT2, ARNT3 (page 275)
- ☐ **DEMAG**
  DNDS50, DNDS73, DNDS100 (page 278)
- ☐ **ENGEL**
  U90RO8, EU125RO8, EU90RO12, EU125RO12 (page 279)
- ☐ **FANUC**
  FU1, FU2 (page 277)

Radius

- ☐ 35 mm
- ☐ 30 mm
- ☐ 19 mm
- ☐ 15 mm
- ☐ 12,7 mm
- ☐ 10 mm
- ☐ 9 mm
- ☐ 120°
- ☐ 90°
- ☐ 70°
- ☐ 60°
- ☐ Other

Opening

- ☐ 1,5 mm
- ☐ 2 mm
- ☐ 2,5 mm
- ☐ 3 mm
- ☐ 4 mm
- ☐ 5 mm
- ☐ 5.5 mm
- ☐ 6 mm
- ☐ 6.5 mm
- ☐ 7 mm
- ☐ 8 mm
- ☐ 9,5 mm
- ☐ Other

AGP1	90°	3

Example: AGP1-C90-3
Nozzle type ARBURG (AGP1) - Cone 90° - Opening 3 mm

REMOVAL TYPE NOZZLE
Order form

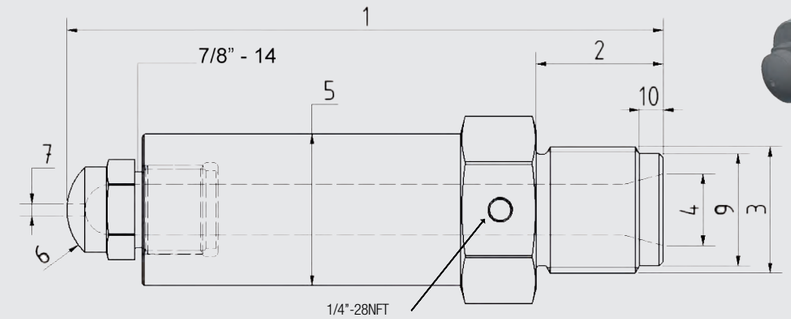

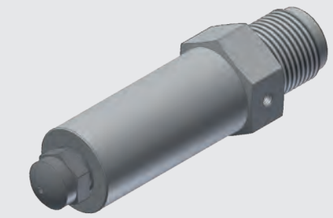

Machine and Model

Injection rate
in cm ³/s

(1) Total length

(2) Thread Length

(3) Thread Type
(M36x2 or 1''1/4-12UNF,...)

(4) Rear opening

(6) Radius
(12,7mm, 15mm, 19mm, 35 mm...)

(7) Opening (1.5, 2.5, 3, 4, ...)

(8) Internal Design
- ☐ Universal (GP)
- ☐ Polyamid (NRT)
- ☐ ABS (FT1)

(9) Ø relief

(10) Relief length

(8) Type

☐ Universel (GP) ☐ Polyamid (NRT) ☐ ABS (FT1)

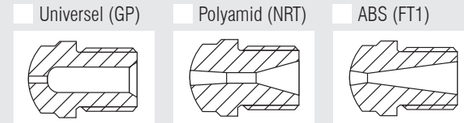

FT1 & NRT : Opening mini : 3mm

Tip length

- ☐ 38 mm (1)
- ☐ 70 mm (2)
- ☐ 95 mm (3)
- ☐ 127 mm (4)

Length 70, 95 & 127mm are not available in ABS version

(6) Radius

- ☐ 35 mm (8)
- ☐ 30 mm (R30)
- ☐ 19 mm (7)
- ☐ 15 mm (6)
- ☐ 12,7 mm (5)
- ☐ 10 mm (R10)
- ☐ 9 mm (9)
- ☐ 120° (4)
- ☐ 90° (3)
- ☐ 70° (1)
- ☐ 60° (2)
- ☐ Other

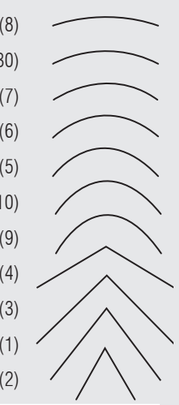

(7) Opening

- ☐ 1,5 mm (I)
- ☐ 2 mm (H)
- ☐ 2,5 mm (J)
- ☐ 3 mm (K)
- ☐ 4 mm (L)
- ☐ 5 mm (M)
- ☐ 5.5 mm (Q)
- ☐ 6 mm (N)
- ☐ 6.5 mm (R)
- ☐ 7 mm (S)
- ☐ 8 mm (O)
- ☐ 9,5 mm (P)
- ☐ Other

GP	1	R15	3

Example: GP1-R15-1
Universal type (GP) - Tip lenght 38mm (1) - Radius 15mm - Opening 3 mm

MIXING NOZZLE - ISOMIX

Order form

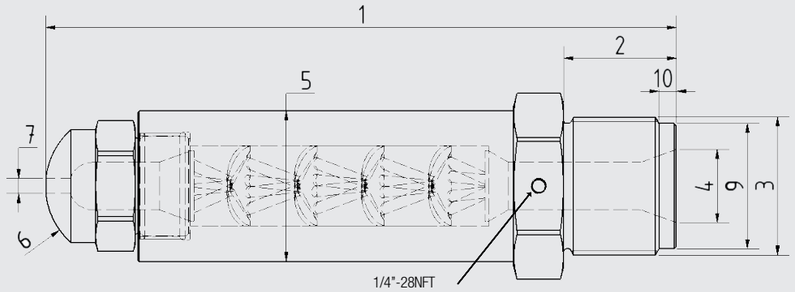

Machine and Model

Injection rate
in cm ³/s

(1) Total length

(7) Opening (1.5, 2.5, 3, 4, ...)

(2) Thread Length

(8) Internal Design
- ☐ Universal (GP)
- ☐ Polyamid (NRT)
- ☐ ABS (FT1)

(3) Thread Type
(M36x2 or 1''1/4-12UNF,...)

(4) Rear opening

(9) Ø relief

(6) Radius
(12,7mm, 15mm, 19mm, 35 mm...)

(10) Relief length

(8) Type

☐ Universel (GP) ☐ Polyamid (NRT) ☐ ABS (FT1)

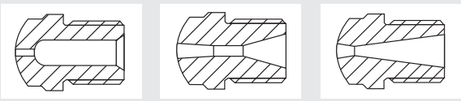

FT1 & NRT : Opening mini : 3mm

Tip length
- ☐ 38 mm (1)
- ☐ 70 mm (2)
- ☐ 95 mm (3)
- ☐ 127 mm (4)

Length 70, 95 & 127mm are not available in ABS version

(6) Radius
- ☐ 35 mm
- ☐ 30 mm
- ☐ 19 mm
- ☐ 15 mm
- ☐ 12,7 mm
- ☐ 10 mm
- ☐ 9 mm
- ☐ 120°
- ☐ 90°
- ☐ 70°
- ☐ 60°
- ☐ Other

(7) Opening
- ☐ 1,5 mm
- ☐ 2 mm
- ☐ 2,5 mm
- ☐ 3 mm
- ☐ 4 mm
- ☐ 5 mm
- ☐ 5.5 mm
- ☐ 6 mm
- ☐ 6.5 mm
- ☐ 7 mm
- ☐ 8 mm
- ☐ 9,5 mm
- ☐ Other

GP	1	R15	3

Example: GP1-R15-1
Universal type (GP) - Tip lenght 38mm (1) - Radius 15 mm - Opening 3 mm

INTERNALLY HEATED NOZZLE

Order form

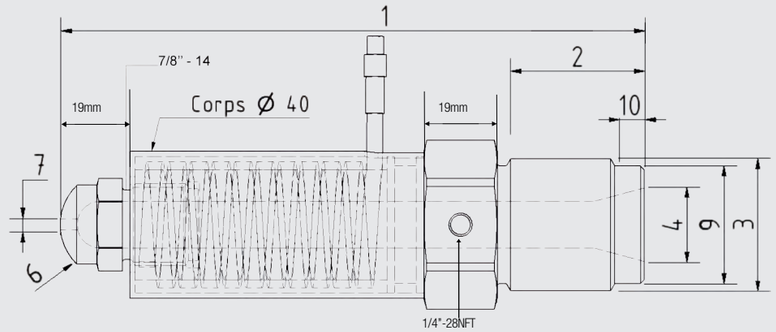

Body length
- ☐ 30 mm
- ☐ 40 mm
- ☐ 50 mm
- ☐ 60 mm
- ☐ 70 mm
- ☐ 80 mm
- ☐ 90 mm
- ☐ 100 mm
- ☐ 125 mm
- ☐ 150 mm

Machine and Model

Injection rate
in cm ³/s

(1) Total length

(7) Opening (1.5, 2.5, 3, 4, ...)

(2) Thread Length

(8) Internal Design
- ☐ Universal (GP)
- ☐ Polyamid (NRT)
- ☐ ABS (FT1)

(3) Thread Type
(M36x2 or 1''1/4-12UNF,...)

(4) Rear opening

(9) Ø relief

(6) Radius
(12,7mm, 15mm, 19mm, 35 mm...)

(10) Relief length

(8) Type

☐ Universel (GP) ☐ Polyamid (NRT) ☐ ABS (FT1)

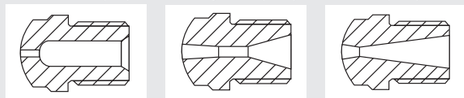

FT1 & NRT : Opening mini : 3mm

Tip length
- ☐ 38 mm (1)
- ☐ 70 mm (2)
- ☐ 95 mm (3)
- ☐ 127 mm (4)

Length 70, 95 & 127mm are not available in ABS version

(6) Radius
- ☐ 35 mm
- ☐ 30 mm
- ☐ 19 mm
- ☐ 15 mm
- ☐ 12,7 mm
- ☐ 10 mm
- ☐ 9 mm
- ☐ 120°
- ☐ 90°
- ☐ 70°
- ☐ 60°
- ☐ Other

(7) Opening
- ☐ 1,5 mm
- ☐ 2 mm
- ☐ 2,5 mm
- ☐ 3 mm
- ☐ 4 mm
- ☐ 5 mm
- ☐ 5.5 mm
- ☐ 6 mm
- ☐ 6.5 mm
- ☐ 7 mm
- ☐ 8 mm
- ☐ 9,5 mm
- ☐ Other

GP	1	R15	3

Example: GP1-R15-1
Universal type (GP) - Tip lenght 38mm (1) - Radius 15mm - Opening 3 mm

FILTRATION NOZZLE - TYPE TPF

Order form

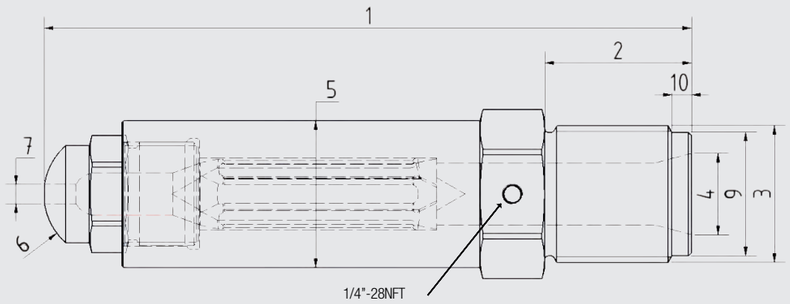

Machine and Model

Injection rate
in cm ³/s

(1) Total length

(2) Thread Length

(3) Thread Type
(M36x2 or 1''1/4-12UNF,...)

(4) Rear opening

(6) Radius
(12,7mm, 15mm, 19mm, 35 mm...)

(7) Opening (1.5, 2.5, 3, 4, ...)

(8) Internal Design
- ☐ Universal (GP)
- ☐ Polyamid (NRT)
- ☐ ABS (FT1)

(9) Ø relief

(10) Relief length

(8) Type

Universel (GP) | Polyamid (NRT) | ABS (FT1)

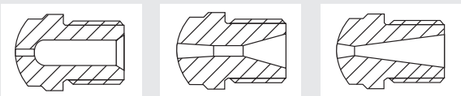

FT1 & NRT : Opening mini : 3mm

Tip length
- 38 mm (1)
- 70 mm (2)
- 95 mm (3)
- 127 mm (4)

Length 70, 95 & 127mm are not available in ABS version

(6) Radius
- 35 mm
- 30 mm
- 19 mm
- 15 mm
- 12,7 mm
- 10 mm
- 9 mm
- 120°
- 90°
- 70°
- 60°
- Other

(7) Opening
- 1,5 mm
- 2 mm
- 2,5 mm
- 3 mm
- 4 mm
- 5 mm
- 5.5 mm
- 6 mm
- 6.5 mm
- 7 mm
- 8 mm
- 9,5 mm
- Other

GP	1	R15	3

Example: GP1-R15-1
Universal type (GP) - Tip lenght 38mm (1) - Radius 15mm - Opening 3 mm

FILTRATION NOZZLE - TYPE BSEF

Order form

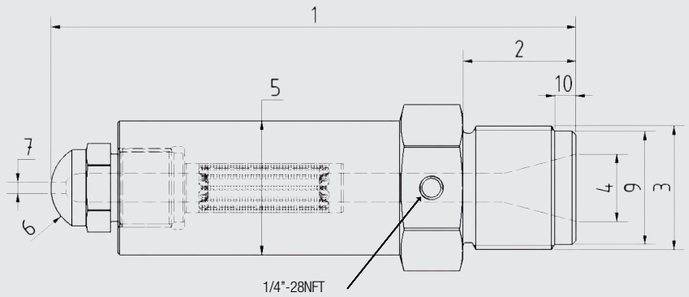

Machine and Model

Injection rate
in cm ³/s

(1) Total length

(2) Thread Length

(3) Thread Type
(M36x2 or 1''1/4-12UNF,...)

(4) Rear opening

(6) Radius
(12,7mm, 15mm, 19mm, 35 mm...)

(7) Opening (1.5, 2.5, 3, 4, ...)

(8) Internal Design
- ☐ Universal (GP)
- ☐ Polyamid (NRT)
- ☐ ABS (FT1)

(9) Ø relief

(10) Relief length

(8) Type

Universel (GP) | Polyamid (NRT) | ABS (FT1)

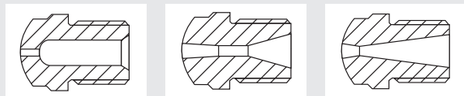

FT1 & NRT : Opening mini : 3mm

Tip length
- 38 mm (1)
- 70 mm (2)
- 95 mm (3)
- 127 mm (4)

Length 70, 95 & 127mm are not available in ABS version

(6) Radius
- 35 mm (8)
- 30 mm (R30)
- 19 mm (7)
- 15 mm (6)
- 12,7 mm (5)
- 10 mm (R10)
- 9 mm (9)
- 120° (4)
- 90° (3)
- 70° (1)
- 60° (2)
- Other

(7) Opening
- 1,5 mm (I)
- 2 mm (H)
- 2,5 mm (J)
- 3 mm (K)
- 4 mm (L)
- 5 mm (M)
- 5.5 mm (Q)
- 6 mm (N)
- 6.5 mm (R)
- 7 mm (S)
- 8 mm (O)
- 9,5 mm (P)
- Other

GP	1	R15	3

Example: GP1-R15-1
Universal type (GP) - Tip lenght 38mm (1) - Radius 15mm - Opening 3 mm

SOLID ONE-PIECE NOZZLE

Order form

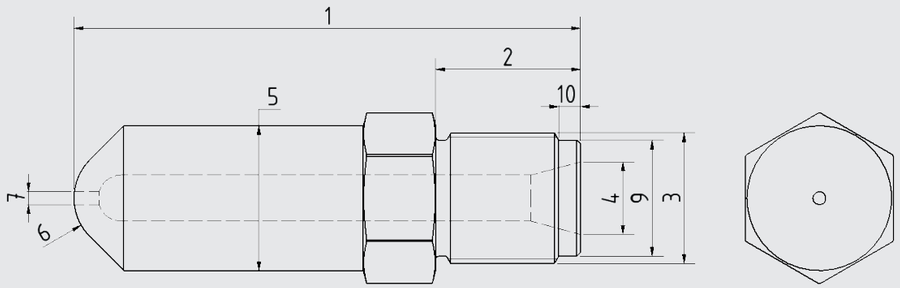

Machine and Model

(1) Total length

(2) Thread Length

(3) Thread Type
(M36x2 or 1''1/4-12UNF,...)

(4) Rear opening

(6) Radius
(12,7mm, 15mm, 19mm, 35 mm...)

Injection rate
in cm ³/s

(7) Opening (1.5, 2.5, 3, 4, ...)

(8) Internal Design
- ☐ Universal (GP)
- ☐ Polyamid (NRT)
- ☐ ABS (ABS)

(9) Ø relief

(10) Relief length

All nozzles are polished with great care. These order forms are available for all our solid nozzle. We also do any type of nozzle with a plan.

MIXING NOZZLE - XPS

Order form

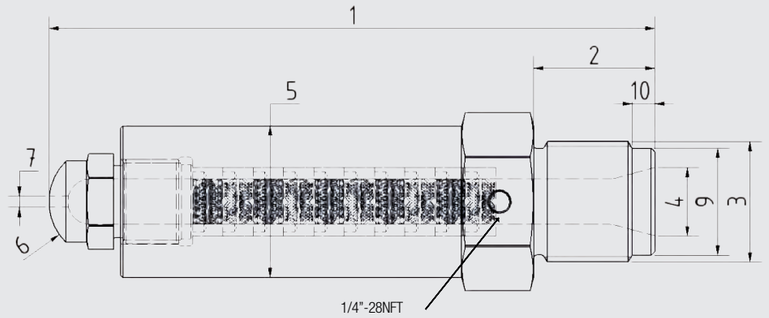

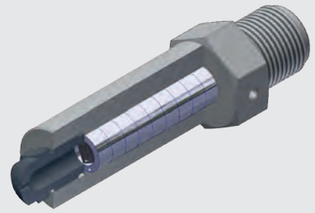

Machine and Model

(1) Total length

(2) Thread Length

(3) Thread Type
(M36x2 or 1''1/4-12UNF,...)

(4) Rear opening

(6) Radius
(12,7mm, 15mm, 19mm, 35 mm...)

Injection rate
in cm ³/s

(7) Opening (1.5, 2.5, 3, 4, ...)

(8) Internal Design
- ☐ Universal (GP)
- ☐ Polyamid (NRT)
- ☐ ABS (ABS)

(9) Ø relief

(10) Relief length

(8) Type

☐ Universel (GP) ☐ Polyamid (NRT) ☐ ABS (ABS)

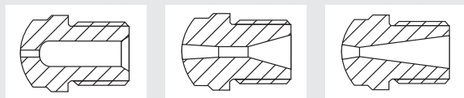

ABS & NRT : Opening mini : 3mm

Tip length

- ☐ 38 mm (1)
- ☐ 70 mm (2)
- ☐ 95 mm (3)
- ☐ 127 mm (4)

Length 70, 95 & 127mm are not available in ABS version

(6) Radius

- ☐ 35 mm (8)
- ☐ 30 mm (R30)
- ☐ 19 mm (7)
- ☐ 15 mm (6)
- ☐ 12,7 mm (5)
- ☐ 10 mm (R10)
- ☐ 9 mm (9)
- ☐ 120° (4)
- ☐ 90° (3)
- ☐ 70° (1)
- ☐ 60° (2)
- ☐ Other

(7) Opening

- ☐ 1,5 mm (I)
- ☐ 2 mm (H)
- ☐ 2,5 mm (J)
- ☐ 3 mm (K)
- ☐ 4 mm (L)
- ☐ 5 mm (M)
- ☐ 5.5 mm (Q)
- ☐ 6 mm (N)
- ☐ 6.5 mm (R)
- ☐ 7 mm (S)
- ☐ 8 mm (O)
- ☐ 9,5 mm (P)
- ☐ Other

GP	1	6	K

Example: GP16K
Universal type (GP) - Tip lenght 38mm (1) - Radius 15mm (6) - Opening 3 mm (K)

Removable Nozzle Tips – MOULDPRO Type p. 271
OEM Nozzle Tips – Arburg Type p. 275
OEM Nozzle Tips – Fanuc Type p. 277
OEM Nozzle Tips – Demag Type p. 278
OEM Nozzle Tips – Engel Type p. 279
Custom Order Forms p. 280
Screw Tips p. 288
Tip Spanner p. 289

Screw Tip Assembly

Part No.	Diameter	Part No.	Diameter
STA-18	18mm	STA-67	67mm
STA-20	20mm	STA-70	70mm
STA-22	22mm	STA-72	72mm
STA-25	25mm	STA-75	75mm
STA-27	27mm	STA-78	78mm
STA-28	28mm	STA-80	80mm
STA-30	30mm	STA-85	85mm
STA-32	32mm	STA-90	90mm
STA-33	33mm	STA-95	95mm
STA-35	35mm	STA-100	100mm
STA-37	37mm	STA-105	105mm
STA-38	38mm	STA-110	110mm
STA-40	40mm	STA-120	120mm
STA-42	42mm	STA-125	125mm
STA-43	43mm	STA-130	130mm
STA-45	45mm	STA-135	135mm
STA-47	47mm	STA-140	140mm
STA-48	48mm	STA-150	150mm
STA-50	50mm	STA-155	155mm
STA-52	52mm	STA-160	160mm
STA-55	55mm	STA-170	170mm
STA-60	60mm	STA-180	180mm
STA-62	62mm	STA-190	190mm
STA-65	65mm	STA-200	200mm

For all popular makes of moulding machine.
Complete nitrided screw tip assembly including Screw Tip, Check Ring and Pressure Ring.
Please advise machine make / model / tonnage and screw size when ordering.

Removable Nozzle Tips – MOULDPRO Type p. 271
OEM Nozzle Tips – Arburg Type p. 275
OEM Nozzle Tips – Fanuc Type p. 277
OEM Nozzle Tips – Demag Type p. 278
OEM Nozzle Tips – Engel Type p. 279
Custom Order Forms p. 280
Screw Tips p. 288
Tip Spanner p. 289

Nozzle and Tip Installation Spanners

Part No.	Spanner size (mm) A/F
SLG22	22
SLG22U	7/8
SLG24	24
SLG27	27
SLG30	30
SLG32	32
SLG36	36
SLG41	41
SLG46	46
SLG50	50
SLG60	60
SLG65	65
SLG70	70

Recommended for fitting and removal of all nozzles
Stilsons and adjustable spanners have a tendency to damage the nozzle, making the fitting of heater bands and thermocouples difficult.
These high quality spanners are the correct A/F for our nozzles and tips and minimise damage on installation and removal.

Leather Gloves

Part No.	Size
WG08/R8	MULTI

Ideal for handling hot machine parts.
Rated up to 200°C EN-407.

Screw Tip Spanner

Part No.	Screw size (mm)
CDVPS	20-35
CDVPM	35-60
CDVPL	60-90

Safe installation and removal
No longer use unsuitable tools (claw wrenches, etc.) which damage the flutes.
Use a key specially developed for the purpose. Available in 3 adjustable versions.
Each model is equipped with 3 adjustment screws to adapt to all types of screw tips.
Two large handles make it easy to grip and provide excellent control.

08. Tools & Accessories

291 Gate Cutters

294 Deburring Tools

295 Soft Tools

296 Pry Bars

297 Accessories

298 Polishing & Abrasives

313 Brushes

317 Compressed Air Blow Guns

318 Measuring Tools

319 Magnifying Glasses

Gate Cutters	p. 291	Accessories	p. 297	Measuring Tools	p. 318
Deburring Tools	p. 294	Polishing & Abrasives	p. 298	Magnifying Glasses	p. 319
Soft Tools	p. 295	Brushes	p. 313		
Pry Bars	p. 296	Compressed Air Blow Guns	p. 317		

Gate Cutter 15° Flush Cut

Flat Back

Part No.	Cut Type	Size	Handle Type
P40	15° - flush cut	4" / 100 mm	Plastic Grip
P50	15° - flush cut	5" / 125 mm	Plastic Grip
P60	15° - flush cut	6" / 150 mm	Plastic Grip
P70	15° - flush cut	7" / 175 mm	Plastic Grip
P90	15° - flush cut	9" / 220 mm	Plastic Grip

Gate Cutter 15° Flush Cut

Curved Back

Part No.	Cut Type	Size	Handle Type
P55	15° - flush cut	5" / 125 mm	Plastic Grip
P65	15° - flush cut	6" / 150 mm	Plastic Grip
P75	15° - flush cut	7,5" / 190 mm	Plastic Grip

Gate Cutter 40° Flush Cut

Flat Back

Part No.	Cut Type	Size	Handle Type
P60-40	40° - flush cut	6" / 150 mm	Plastic Grip

Gate Cutter 90° Flush Cut

Flat Back

Part No.	Cut Type	Size	Handle Type
P60-90	90° - flush cut	6" / 150 mm	Plastic Grip

High quality alloy steel.
Coil spring return provides fast smooth action and improves productivity.
Induction hardened cutting edge.
Black oxide, anti-glare finish reduces visual fatigue and corrosion.

Gate Cutters	**p. 291**	Accessories	p. 297	Measuring Tools	p. 318
Deburring Tools	p. 294	Polishing & Abrasives	p. 298	Magnifying Glasses	p. 319
Soft Tools	p. 295	Brushes	p. 313		
Pry Bars	p. 296	Compressed Air Blow Guns	p. 317		

Heated Gate Cutters

Part No.	Back	Blade Length (mm)	Blade Type	Blade Angle	Size (mm)	Cut capacity (mm)	Weight	
HT-120	Flat Back	10	End Cut	–	150	ø 4	270 g	
HT-130	Flat Back	27	Long	10°	165	ø 4	270 g	
HT-140	Flat Back	22	Flat	–	160	ø 4	265 g	
HT-160	Curved Back	16	Narrow	10°	150	ø 4	240 g	
HT-170	Flat Back	22	Angle	40°	150	ø 4	250 g	
HT-180	Curved Back	16	Standard	25°	190	ø 4	250 g	
HT-200	Curved Back	23	Heavy Duty 29 Watt	16°	190	ø 7	375 g	

Transformer for Heated Gate Cutters

Part No.	Power Input	Voltage output	Size (mm)
MHN-PS01	110-240V.	24 V.	45x110x165

Spare Heating Element

Part No.	Power input	Heat Effect
W-19	24 V	19 Watt
W-29	24 V	29 Watt

Gate Cutters	p. 291	Accessories	p. 297	Measuring Tools	p. 318
Deburring Tools	**p. 294**	Polishing & Abrasives	p. 298	Magnifying Glasses	p. 319
Soft Tools	p. 295	Brushes	p. 313		
Pry Bars	p. 296	Compressed Air Blow Guns	p. 317		

Ceramic Knife

Ideal for curved and complicated shapes; Excels on ultra-hard resins like Glass-fiber, carbon-fiber and talc filled plastics.

Also it can be used on soft metals like aluminum, copper and brass.

- Space age ceramics make safe deburring possible because of Work-finisher's unique non-blade like edge. (No sharp edge).
- Deburrs hard plastics effortlessly without the fear of cutting your hand or fingers in the process. (Very safe knife).
- Can be used for surface finishing the plastics moulding parts, very small, very confined areas, narrow, concave area or complex portion.

Ceramic Knife

Part No.	Blade material	Length	Blade dimension	Blade Profile	
MWF133	Ceramic 1250 HV	133 mm	25 x 5 mm	Convexed	1

Ceramic Knife

Part No.	Blade material	Length	Blade dimension	Blade Profile	
MWF175	Ceramic 1250 HV	175 mm	40 x 14 mm	Convexed	1

De-burring Tool

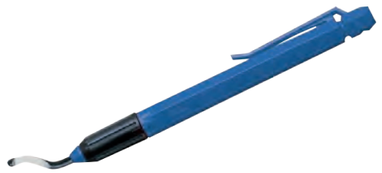

Part No.	Type	Blade Material	No. of blades	Blade size ø	
E02000	Handle	Steel	1	3,2	1
BS1010	Replacement blades	Steel	10	3,2	1

Gate Cutters	p. 291	Accessories	p. 297	Measuring Tools	p. 318
Deburring Tools	p. 294	Polishing & Abrasives	p. 298	Magnifying Glasses	p. 319
Soft Tools	**p. 295**	Brushes	p. 313		
Pry Bars	p. 296	Compressed Air Blow Guns	p. 317		

Bronze Pliers Angled, Short

Part No.	Description	Size	
BC60	60° Needle Nose	6"/ 150 mm	1

Bronze Pliers Angled, Long

Part No.	Description	Size	
BC90	60° Needle Nose	9"/ 230 mm	1

Bronze Pliers Straight, Short

Part No.	Description	Size	
BL60	Straight Needle Nose	6"/ 150 mm	1

Bronze Pliers Straight, Long

Part No.	Description	Size	
BL90	Straight Needle Nose	9"/ 230 mm	1

Bronze Side Cutter

Part No.	Description	Size	
BD60	Side Cutter	6"/ 150 mm	1

High quality Bronze Pliers, reduce risk of damaging the mould.

Bevelled Blade Scraper

Part No.	Blade Width	Blade Length	Total Length	Material	
BSC125L	25 mm	177 mm	273 mm	Brass	1
BSC125	32 mm	100 mm	200 mm	Brass	1
BSC200	50 mm	100 mm	200 mm	Brass	1

Angled Scraper no Bevel

Part No.	Blade Width	Material	
BSC125A	32 mm	Brass	1

Brass Tools

Part No.	Description	Length	
BRT5	5mm Diameter	350mm	1
BRT5/90	5mm Diameter / 90 Degree	350mm	1
BRT8	8mm Diameter	400mm	1
BRTK	Kit Comprising BRT5 / BRT5/90 / BRT8		1

A range of brass hand tools manufactured from high grade brass for safely working on mould tools without damaging the mould surface; ideal for removing frozen sprues or stuck parts.
The tips are supplied blunt and may be shaped to suit specific requirements.

Knock Out Bar

Part No.	Description	Size	
704-31	Knock out Bar	ø 8	1
705-31	Replacement Bar	ø 8	1

Simple but effective tool that combines a tough steel rod with threaded brass replaceable tips that prevent damage to the mould surface.
The quickly replaced threaded brass tip ensures that the rod never gets too short or wears out and minimises the risk of burning.
The steel rod never wears out and the end will not 'mushroom' like a solid brass rod.
- Steel Rod has an anti-rust finish.
- Steel Rod has 10mm Flat for simple removal of used tips.
- Brass Tip is machined to fine point.
- Supplied complete with one replacement tip.

Steel Rod: 13mm dia. / 420mm length.
Brass Tip: 8mm dia. / 105mm length.

Gate Cutters	p. 291	Accessories	p. 297	Measuring Tools	p. 318
Deburring Tools	p. 294	Polishing & Abrasives	p. 298	Magnifying Glasses	p. 319
Soft Tools	p. 295	Brushes	p. 313		
Pry Bars	**p. 296**	Compressed Air Blow Guns	p. 317		

Premium Aluminium Bronze Pry Bars

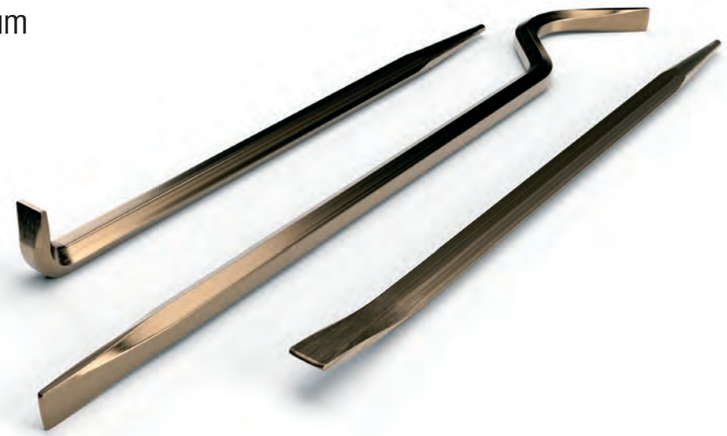

Pry Bar, Radius Head

Part No.	Length	Hex	Weight (kg)	
MPB-500	18" - 460 mm.	5/8"	0,8	1

Pry Bar, Rolling Head

Part No.	Length	Hex	Weight (kg)	
MPB-600	18" - 460 mm.	5/8"	0,75	1

Pry Bar, Angle Head

Part No.	Length	Hex	Weight (kg)	
MPB-700	18" - 460 mm.	5/8"	0,7	1

Description
Premium Alu-Bronze Alloy Pry Bars ideal for alignment and assemble/disassemble mould bases without risk of surface damages or scratches.

Gate Cutters	p. 291	**Accessories**	**p. 297**	Measuring Tools	p. 318
Deburring Tools	p. 294	Polishing & Abrasives	p. 298	Magnifying Glasses	p. 319
Soft Tools	p. 295	Brushes	p. 313		
Pry Bars	p. 296	Compressed Air Blow Guns	p. 317		

Copper and Rawhide Mallet

Part No.	Size	Ø	Weight	Length	
THO208	A	25 mm	355 g	230 mm	1
THO210	1	32 mm	710 g	270 mm	1
THO212	2	38 mm	1070 g	305 mm	1
THO214	3	44 mm	1600 g	305 mm	1
THO216	4	50 mm	2380 g	355 mm	1

Malleable-iron head fitted with one face of pure copper, the other highly compressed buffalo rawhide.
Wooden Handle.

Nylon Hammer

Part No.	Face diameter	Weight	Length	
THO710	32 mm	445 g	280 mm	1
THO712	38 mm	650 g	305 mm	1
THO714	44 mm	850 g	305 mm	1
THO716	50 mm	1230 g	305 mm	1

- Worn faces can be quickly replaced BY HAND providing minimum down time.
- All faces are one piece mouldings.
- There are no metal pegs or inserts which can damage the workpiece when worn.
- Serrations in the metal head prevent faces loosening in use.
- Faces have a shoulder for extra strength and to prevent fracture from misdirected blows.
- To suit a wide range of hammering applications 5 alternative hardness of screw-in faces are a vailable – colour coded for easy identification.

Dead Blow Nylon Hammer

Part No.	Face diameter	Weight	Length	
THO1010	32 mm	550 g	275 mm	1
THO1212	38 mm	700 g	305 mm	1
THO1414	44 mm	900 g	310 mm	1
THO1616	50 mm	1150 g	325 mm	1
THO2020	63 mm	1850 g	370 mm	1

Thorace dead blow hammers are a coated die-cast head and handle of aluminium alloy with shock absorbent rubber grip.
The hollow head is partially filled with steel shot which adds to the weight, prevents rebound and delivers 'dead' blows of maximum impact.

Ballpoint L-Hex Key Sets

Part No.	Pieces in set	Sizes	Type	
BLX9	9	1.5-2-2.5-3-4-5-6-8-10 mm	Metric	1
BLX13	13	3/64-1/16-5/64-3/32-7/64-1/8-5/32-9/64-3/16-7/32-1/4-5/16-3/8	Imperial	1

Protanium® steel and are up to 20% stronger than competitor tools.
BriteGuard premium chrome-like finish is attractive, professional quality, and easy to clean.

Spare Faces

Face Diameter		Soft Grey Shore A 63-73	Medium Red Shore D 45-55	Tough Brown PU Shore D 58-62	Hard White Nylon Shore D 57-61	Extra Hard Yellow Rockwell R103
32	10	THO-SG10	THO-MR10	THO-TB10	THO-HW10	THO-HY10
38	10	THO-SG12	THO-MR12	THO-TB12	THO-HW12	THO-HY12
44	10	THO-SG14	THO-MR14	THO-TB14	THO-HW14	THO-HY14
50	10	THO-SG16	THO-MR16	THO-TB16	THO-HW16	THO-HY16
63	10	-	-	THO-TB20	THO-HW20	-

Gate Cutters	p. 291	Accessories	p. 297	Measuring Tools	p. 318
Deburring Tools	p. 294	**Polishing & Abrasives**	**p. 298**	Magnifying Glasses	p. 319
Soft Tools	p. 295	Brushes	p. 313		
Pry Bars	p. 296	Compressed Air Blow Guns	p. 317		

Mini Grinding Machine

Part No.	Speed	Voltage	Collet	Foot Control	
PP35SET	0-35.000 rpm	115/230 V.	3 mm	Yes	1

Spare Collets

Part No.	Collet	
PP35C235	2,35 mm	1
PP35C300	3,00 mm	1
PP35C3175	3,175 mm	1

Straight Air Micro Grinder

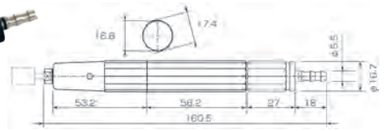

Part No.	RPM	Collet size	Weight nt.	Weight Gross
MSG-3BSN	65.000	ø 3,0 mm	130 g	340 g

Outstanding accuracy and durability.
Low air consumption at 0.4 Mpa.

Set of Package
- Air hose 1.5m.
- Hose band 2 pcs.
- Quick joint.
- Over hose set pin.
- Wrench.
- Ø 10 Mounted point.
- Ø13 Mounted NSL 2 pcs.
- Lap shaft.
- Ø 25 disk type NSL 7 pcs.

Tools & Accessories | Polishing & Abrasives

Gate Cutters	p. 291	Accessories	p. 297	Measuring Tools	p. 318
Deburring Tools	p. 294	**Polishing & Abrasives**	**p. 298**	Magnifying Glasses	p. 319
Soft Tools	p. 295	Brushes	p. 313		
Pry Bars	p. 296	Compressed Air Blow Guns	p. 317		

Linear Air Polisher

Part No.	Collet	Strokes /min	Linear Stroke	Noise level	Weight nt.	Weight Gross
TLL-07	Ø3 / 0.5-3 x 4-10 mm	22-25.000	0,7 mm.	64 dB (A)	180 g	340 g

Linear reciprocating stroke filing for polishing narrow areas and corners of precision parts.
Ideal for Mould Finishing Super Stones.

Set of Package
- Turbolap (Body).
- Super collet.
- Air hose 1.5m.
- Hose band 2 pcs.
- Quick joint.
- Over hose.
- TL Wrench.
- Ceramic stone 1pc.

Carbide Burrs Set

Part No.	Cut type	Shank	
CB10S	Double cut	3 mm	1 (set of 10 pcs)

Diamond Needle File Set

Part No.	Size	Grit Size	
DIAZ-5	140 mm	D126	1

Description
Diamond Needle files.
Quality Diamond File Set, useful for working with steel, hardened steel, carbide and ceramic/glass materials.

Gate Cutters	p. 291	Accessories	p. 297	Measuring Tools	p. 318
Deburring Tools	p. 294	**Polishing & Abrasives**	**p. 298**	Magnifying Glasses	p. 319
Soft Tools	p. 295	Brushes	p. 313		
Pry Bars	p. 296	Compressed Air Blow Guns	p. 317		

Blue Stones Grinding Points, Shank Ø 3 x 40 mm - Cylinder

Part No.	Head Dimensions	Hardness	Grit size	Shank dimensions	Cutting speed max.	
M-15210	Ø 2 x 5 mm	QU	120	Ø 3 x 40 mm	50 m/s	10
M-15212	Ø 3 x 6 mm	QU	120	Ø 3 x 40 mm	50 m/s	10
M-15214	Ø 4 x 8 mm	QU	120	Ø 3 x 40 mm	50 m/s	10
M-15216	Ø 5 x 6 mm	QU	120	Ø 3 x 40 mm	50 m/s	10
M-15218	Ø 5 x 10 mm	QU	120	Ø 3 x 40 mm	50 m/s	10
M-15220	Ø 6 x 10 mm	QU	120	Ø 3 x 40 mm	50 m/s	10
M-15222	Ø 8 x 10 mm	QU	120	Ø 3 x 40 mm	50 m/s	10
M-15224	Ø 10 x 10 mm	QU	120	Ø 3 x 40 mm	50 m/s	10

Blue Stones Grinding Points, Shank Ø 3 x 40 mm - Cylinder

Part No.	Head Dimensions	Hardness	Grit size	Shank dimensions	Cutting speed max.	
M-15226	Ø 3 mm	QU	120	Ø 3 x 40 mm	50 m/s	10
M-15228	Ø 5 mm	QU	120	Ø 3 x 40 mm	50 m/s	10
M-15230	Ø 6 mm	QU	120	Ø 3 x 40 mm	50 m/s	10

Set of grinding points Blue Stones – Content: 19 Pieces

Part No.	Grit size	
M-15232	K 120	1

Tools & Accessories | Polishing & Abrasives

Gate Cutters	p. 291	Accessories	p. 297	Measuring Tools	p. 318
Deburring Tools	p. 294	**Polishing & Abrasives**	**p. 298**	Magnifying Glasses	p. 319
Soft Tools	p. 295	Brushes	p. 313		
Pry Bars	p. 296	Compressed Air Blow Guns	p. 317		

Rubber-bonded polishing points
Soft rubber bonding

Rubber-bonded polishing points

The special features of the soft rubber bond is an extremely soft cut, high surface quality and very low stock removal of the corundum grit. The outstanding elasticity of the soft rubber bond results in a relatively low cutting speed for the vibration-free operation. Cutting speed Vmax: 15 m/s.

Rubber-Bonded Polishing Points – Sphere

Part No.	Head Dimensions	Grit Size	Colour	Shank Dimensions	
M-15274	Ø 5 mm	120	Red	Ø 3 x 30 mm	10
M-15240	Ø 5 mm	120	Red	Ø 3 x 60 mm	10
M-15276	Ø 8 mm	120	Red	Ø 3 x 30 mm	10
M-15238	Ø 8 mm	120	Red	Ø 3 x 60 mm	10
M-15278	Ø 10 mm	120	Red	Ø 3 x 30 mm	10
M-15236	Ø 10 mm	120	Red	Ø 3 x 60 mm	10
M-15234	Ø 13 mm	120	Red	Ø 3 x 30 mm	10

Rubber-Bonded Polishing Points – Cylinder

Part No.	Head Dimensions	Grit Size	Colour	Shank Dimensions	
M-15242	Ø 4 x 8 mm	80	grey	Ø 3 x 60 mm	10
M-15258	Ø 4 x 8 mm	120	red	Ø 3 x 30 mm	10
M-15280	Ø 4 x 8 mm	220	brown	Ø 3 x 60 mm	10
M-15296	Ø 4 x 8 mm	280	green	Ø 3 x 30 mm	10
M-15244	Ø 5 x 10 mm	80	grey	Ø 3 x 60 mm	10
M-15260	Ø 5 x 10 mm	120	red	Ø 3 x 30 mm	10
M-15282	Ø 5 x 10 mm	220	brown	Ø 3 x 60 mm	10
M-15298	Ø 5 x 10 mm	280	green	Ø 3 x 30 mm	10
M-15246	Ø 6 x 10 mm	80	grey	Ø 3 x 60 mm	10
M-15262	Ø 6 x 10 mm	120	red	Ø 3 x 30 mm	10
M-15284	Ø 6 x 10 mm	220	brown	Ø 3 x 60 mm	10
M-15300	Ø 6 x 10 mm	280	green	Ø 3 x 30 mm	10
M-15248	Ø 8 x 10 mm	80	grey	Ø 3 x 60 mm	10
M-15264	Ø 8 x 10 mm	120	red	Ø 3 x 30 mm	10
M-15286	Ø 8 x 10 mm	220	brown	Ø 3 x 60 mm	10
M-15302	Ø 8 x 10 mm	280	green	Ø 3 x 30 mm	10
M-15250	Ø 10 x 10 mm	80	grey	Ø 3 x 60 mm	10
M-15266	Ø 10 x 10 mm	120	red	Ø 3 x 30 mm	10
M-15288	Ø 10 x 10 mm	220	brown	Ø 3 x 60 mm	10
M-15304	Ø 10 x 10 mm	280	green	Ø 3 x 30 mm	10
M-15252	Ø 13 x 13 mm	80	grey	Ø 3 x 60 mm	10
M-15268	Ø 13 x 13 mm	120	red	Ø 3 x 30 mm	10
M-15290	Ø 13 x 13 mm	220	brown	Ø 3 x 60 mm	10
M-15306	Ø 13 x 13 mm	280	green	Ø 3 x 30 mm	10
M-15254	Ø 13 x 16 mm	80	grey	Ø 3 x 60 mm	10
M-15270	Ø 13 x 16 mm	120	red	Ø 3 x 60 mm	10
M-15292	Ø 13 x 16 mm	220	brown	Ø 3 x 60 mm	10
M-15308	Ø 13 x 16 mm	280	green	Ø 3 x 60 mm	10

Gate Cutters	p. 291	Accessories	p. 297	Measuring Tools	p. 318
Deburring Tools	p. 294	**Polishing & Abrasives**	**p. 298**	Magnifying Glasses	p. 319
Soft Tools	p. 295	Brushes	p. 313		
Pry Bars	p. 296	Compressed Air Blow Guns	p. 317		

Polishing Grinding Discs, Shank Ø 3 x 40 mm – Corundum

Part No.	Polish	Head dimensions	Grit Size	Colour	Shank dimensions	Recommended speed	
M-15056	Extra Coarse	Ø 25 x 4 mm	P 36	Brown	Ø 3 x 37 mm	5,000 1/min	10
M-15058	Very Coarse	Ø 25 x 4 mm	P 50	Green	Ø 3 x 37 mm	5,000 1/min	10
M-15050	Coarse	Ø 25 x 4 mm	P 80	Yellow	Ø 3 x 37 mm	5,000 1/min	10
M-15060	Medium	Ø 25 x 4 mm	P 120	White	Ø 3 x 37 mm	5,000 1/min	10
M-15052	Standard	Ø 25 x 4 mm	P 220	Red	Ø 3 x 37 mm	5,000 1/min	10

Polishing Grinding Discs, Shank Ø 3 x 40 mm – Extra Fine High-Grade Corundum

Part No.	Polish	Head dimensions	Grit Size	Colour	Shank dimensions	Recommended speed	
M-15054	Fine	Ø 25 x 4 mm	P 400	Blue	Ø 3 x 37 mm	5,000 1/min	10

Tools & Accessories | Polishing & Abrasives

Gate Cutters	p. 291	Accessories	p. 297	Measuring Tools	p. 318
Deburring Tools	p. 294	**Polishing & Abrasives**	**p. 298**	Magnifying Glasses	p. 319
Soft Tools	p. 295	Brushes	p. 313		
Pry Bars	p. 296	Compressed Air Blow Guns	p. 317		

Polishing Brushes

Part No.	Material	Head Dimensions	Material	Shank Dimensions	
M-15092	Polishing Brush, Wheel	Ø 5.5 X 11 mm	Goat Hair, White	Ø 3 x 37 mm	10
M-15094	Polishing Brush, Wheel	Ø 5.5 X 11 mm	Brass, Corrugated	Ø 3 x 37 mm	10
M-15096	Polishing Brush, Small Brush	Ø 12 X 8 mm	Brass, Corrugated	Ø 3 x 30 mm	10
M-15098	Polishing Brush, Small Brush	Ø 12 X 8 mm	V2a Wire, Corrugated	Ø 3 x 30 mm	10
M-15100	Polishing Brush, Cup, Bristles	Ø 8 X 4 mm	Black, Bevelled	Ø 3 x 30 mm	10
M-15102	Polishing Brush,Cup	Ø 12 X 8 mm	Goat Hair White, Bevelled	Ø 3 x 30 mm	10
M-15104	Polishing Brush, Cup	Ø 16 X 1 mm	Bristles, Black, Bevelled	Ø 3 x 30 mm	10
M-15106	Polishing Brush, Cup	Ø 22 X 1 mm	Bristles, Black, Straight	Ø 3 x 30 mm	10
M-15108	Polishing Brush, Wheel	Ø 22 X 2 mm	Goat Hair, White	Ø 3 x 37 mm	10
M-15110	Polishing Buff, Wheel	Ø 22 X 6 mm	Fine Cotton	Ø 3 x 37 mm	10

Abrasive Discs Corundum, Self-Adhesive

Part No.	Dimensions	Grit Size	Type	
M-15112	Ø 20 mm	60	R 1	50
M-15114	Ø 20 mm	80	R 1	50
M-15116	Ø 20 mm	120	R 1	50
M-15118	Ø 20 mm	150	R 1	50
M-15120	Ø 20 mm	180	R 1	50
M-15122	Ø 20 mm	240	R 1	50
M-15124	Ø 20 mm	320	R 1	50
M-15126	Ø 20 mm	400	R 1	50
M-15128	Ø 20 mm	600	R 1	50

Rubber Holders

Part No.	Dimensions	Shank Dimensions	Type	
M-15130	Ø 18 mm	Ø 3 x 26 mm	R 1	1

Gate Cutters	p. 291	Accessories	p. 297	Measuring Tools	p. 318
Deburring Tools	p. 294	**Polishing & Abrasives**	**p. 298**	Magnifying Glasses	p. 319
Soft Tools	p. 295	Brushes	p. 313		
Pry Bars	p. 296	Compressed Air Blow Guns	p. 317		

Abrasive Fleece, Shank Ø 3 mm, Triple-Layer

	Part No.	Head dimensions	Grit Size	Shank dimensions	Rotation speed max.	
Ideally suited for all metals. High stock removal on aluminium, gold and silver. • very coarse grade	**M-15082**	Ø 22 x 13 mm	K 60	Ø 3 x 40 mm	10000 1/min	10 pieces
	M-15062	Ø 30 x 17 mm	K 60	Ø 3 x 40 mm	8000 1/min	10 pieces
	M-15072	Ø 40 x 22 mm	K 60	Ø 3 x 40 mm	8000 1/min	10 pieces
For processing all materials, ideal for removing small scratches, for deburring etc.	**M-15084**	Ø 22 x 13 mm	K 80	Ø 3 x 40 mm	10000 1/min	10 pieces
	M-15064	Ø 30 x 17 mm	K 80	Ø 3 x 40 mm	8000 1/min	10 pieces
	M-15074	Ø 40 x 22 mm	K 80	Ø 3 x 40 mm	8000 1/min	10 pieces
Very well suited for processing aluminium and stainless steel. • very firm grade.	**M-15086**	Ø 22 x 13 mm	K 180	Ø 3 x 40 mm	10000 1/min	10 pieces
	M-15066	Ø 30 x 17 mm	K 180	Ø 3 x 40 mm	8000 1/min	10 pieces
	M-15076	Ø 40 x 22 mm	K 180	Ø 3 x 40 mm	8000 1/min	10 pieces
For processing all metals, highly versatile	**M-15088**	Ø 22 x 13 mm	K 240	Ø 3 x 40 mm	10000 1/min	10 pieces
	M-15068	Ø 30 x 17 mm	K 240	Ø 3 x 40 mm	8000 1/min	10 pieces
	M-15078	Ø 40 x 22 mm	K 240	Ø 3 x 40 mm	8000 1/min	10 pieces
Using this grinding fleece results in a slight shine. Ideal for aluminium, stainless steels, etc.	**M-25100**	Ø 22 x 13 mm	K 400	Ø 3 x 40 mm	10000 1/min	10 pieces
	M-25105	Ø 25 x 17 mm	K 400	Ø 3 x 40 mm	10000 1/min	10 pieces
	M-25110	Ø 30 x 17 mm	K 400	Ø 3 x 40 mm	8000 1/min	10 pieces

Grit Fleece
Very Coarse = K 60, Coarse = K 80, Medium =K 180, Fine = K 240, Very Fine = K 400, Ultra Fine = K 1000

Copper Gauze

Part No.	Width	Length	Mesh Wire	Mesh Type	Weight (kg).	
CG30	127	30m.	Ø 0,15 mm.	Coarse	0,6	1
CG30HD	127	30m.	0,05 x 0,6 mm.	Fine	1,2	1

A faster, more economical, and safer way to clean your screw, barrel, and tip assemblies...
Do not confuse it with less durable substitute products.

Specifications
Made of 100% copper wire.
Seamless 127 mm wide mesh. Being 100% copper, it will neither smoke nor burn when used on hot parts.
Excellent abrasive properties. Copper will not erode or scratch treated surfaces as its hardness is lower than that of metal.
Non-flammable, rust-free, and does not fray.
Much more effective than other methods (metal sponges, wire brushes, etc.).
Can be used on hot parts—no need to wait for cooling.

Applications
Cleaning screw and barrel assemblies in injection moulding or extrusion machines.
Cleaning molds, tools, vents, or any other application such as removing burrs.
Assisting in material and color changes.

Copper Gauze Spunch

Part No.	Mesh Wire	Mesh Type	
CGP1	0,05 x 0,6 mm.	Fine	1

Tools & Accessories | Polishing & Abrasives

Gate Cutters	p. 291	Accessories	p. 297	Measuring Tools	p. 318
Deburring Tools	p. 294	**Polishing & Abrasives**	**p. 298**	Magnifying Glasses	p. 319
Soft Tools	p. 295	Brushes	p. 313		
Pry Bars	p. 296	Compressed Air Blow Guns	p. 317		

Diamond compounds
Oil and alcohol soluble

Our best-selling diamond compound.
Specially designed for the new types of steel that tools are manufactured in. To be used neat or with just two drops of diamond fluid. Normally, diamond compounds must be used with a large amount of fluid. Using a large amount of fluid, however, has the effect of making the diamond compound runny, so that a lot of it is simply projected away during polishing. Mouldpro diamond compound effectively creates a precisely calibrated, blocky diamond grit, which guarantees top-quality polishing. The result is an incomparably high level of removal on all materials: From soft aluminium to the hardest ceramics as well as for unlimited use on all grades of steel and tungsten carbides.

Diamond Compounds, Oil and Alcohol Soluble

Part No.	Content	Grit Size	Concentration	Colour	
MPD1	5 g	1 µm	Extra Strong	Blue	1
MPD3	5 g	3 µm	Extra Strong	Yellow	1
MPD6	5 g	6 µm	Extra Strong	Green	1
MPD8	5 g	9 µm	Extra Strong	Red	1
MPD14	5 g	14 µm	Extra Strong	Brown	1
MPD25	5 g	25 µm	Extra Strong	Mahagony	1

Diamond Compounds, Oil and Alcohol Soluble

Part No.	Content	Grit Size	Concentration	Colour	
MPD1-10	10 g	1 µm	Extra Strong	Blue	1
MPD3-10	10 g	3 µm	Extra Strong	Yellow	1
MPD6-10	10 g	6 µm	Extra Strong	Green	1
MPD8-10	10 g	9 µm	Extra Strong	Red	1
MPD14-10	10 g	14 µm	Extra Strong	Brown	1
MPD25-10	10 g	25 µm	Extra Strong	Mahagony	1

Polycrystalline diamond compounds

Polycrystalline diamond compound consists of a low-viscosity, easily spreadable oil-soluble carrier with hard synthetic diamonds (PKD). The polycrystalline diamond is significantly stronger than the cheaper monocrystalline diamond. Owing to the high stock removal rates, this compound is particularly suitable for hard materials such as ceramic, carbide, cobalt, titanium or nickel.

Polycrystalline Diamond Compound, Oil Soluble

Part No.	Content	Grit Size	Concentration	Colour	
PKD1	5 g	1 µm	Extra Strong	1 my / Blue	1
PKD3	5 g	3 µm	Extra Strong	3 my / Green	1
PKD6	5 g	6 µm	Extra Strong	6 my / Yellow	1
PKD9	5 g	9 µm	Extra Strong	9 my / Red	1
PKD15	5 g	15 µm	Extra Strong	15 my / Brown	1
PKD25	5 g	25 µm	Extra Strong	25 my / Mahagony	1

Diamond Fluids
Diamond fluid, oil soluble

Specially for diamond compounds, with 100% corrosion protection.

Diamond fluid, Oil Soluble

Part No.	Content	
M-15440	0.5 L	1
M-15442	2.5 L	1

Gate Cutters	p. 291	Accessories	p. 297	Measuring Tools	p. 318
Deburring Tools	p. 294	**Polishing & Abrasives**	**p. 298**	Magnifying Glasses	p. 319
Soft Tools	p. 295	Brushes	p. 313		
Pry Bars	p. 296	Compressed Air Blow Guns	p. 317		

Felt Bobs - Cylindrical

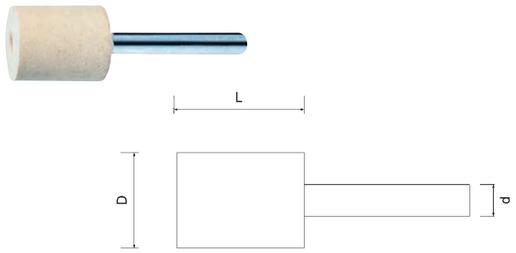

Part No.	D	L	d1	
FIL612C	6	12	3	1 (bag of 10 pcs)
FIL1012C	10	12	3	1 (bag of 10 pcs)
FIL1219C	12	19	3	1 (bag of 10 pcs)
FIL1632C	16	32	3	1 (bag of 10 pcs)
FIL1932C	19	32	6	1 (bag of 10 pcs)
FIL3238C	32	38	6	1 (bag of 10 pcs)

Felt Bobs - Cone Shape

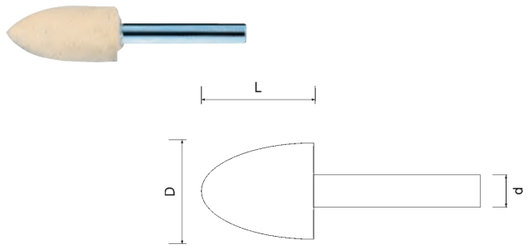

Part No.	D	L	d1	
FIL616K	6	16	3	1 (bag of 10 pcs)
FIL1012K	10	12	3	1 (bag of 10 pcs)
FIL1219K	12	19	3	1 (bag of 10 pcs)
FIL1625K	16	25	3	1 (bag of 10 pcs)
FIL1925K	19	25	6	1 (bag of 10 pcs)

Felt Sticks - Hardened

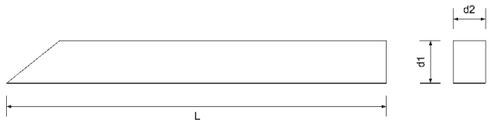

Part No.	d1	d2	L	
FIL66100	6	6	100	1 (bag of 10 pcs)
FIL1010150	10	10	150	1 (bag of 10 pcs)

Hard Wood Lapping Sticks

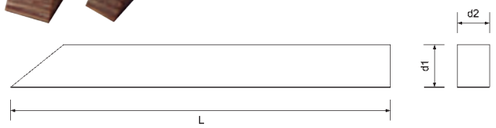

Part No.	Shape	d1	d2	L	
LS3	Rectangular	3	4,5	150	1 (bag of 10 pcs)
LS6	Rectangular	6	4,5	150	1 (bag of 10 pcs)
LSS3	Square	3	3	150	1 (bag of 10 pcs)
LSS6	Square	6	6	150	1 (bag of 10 pcs)
LSR3	Round	ø3	ø3	150	1 (bag of 10 pcs)
LSR6	Round	ø6	ø6	150	1 (bag of 10 pcs)

Handpads

Part No.	Size	Grade	Colour	
NHP021	155x225 mm	Fine	Green	1 (Bags of 10 pcs)
NHP006	155x225 mm	Very Fine	Maroon	1 (Bags of 10 pcs)
NHP008	155x225 mm	Ultra Fine	Light Grey	1 (Bags of 10 pcs)

A range of general purpose handpads designed for cleaning and finishing applications.

Tools & Accessories | Polishing & Abrasives

Gate Cutters	p. 291	Accessories	p. 297	Measuring Tools	p. 318
Deburring Tools	p. 294	**Polishing & Abrasives**	**p. 298**	Magnifying Glasses	p. 319
Soft Tools	p. 295	Brushes	p. 313		
Pry Bars	p. 296	Compressed Air Blow Guns	p. 317		

Mould Finishing Super Stones

New SuperStone offers an improved cutting ability, longer life and an increased heat resistance of approximately 45% over the conventional type. New SuperStone can be used in ultrasonic polishing machines, electric micro grinders, reciprocating profilers, or by hand use with holder.

SuperStone can also be used on soft metals such as aluminium, copper and brass.

- Incredible strength and flexibility. It will offer excellent polishing ability even under every strenuous condition.
- Non-clogging. Beautiful polishing result on all types of metals in small and detailed areas.
- Available in any dimensions in flat/round profiles upon your demand.
- Available in grit 80 to 1200. Easy to identify by colour-coding.

Flat Type

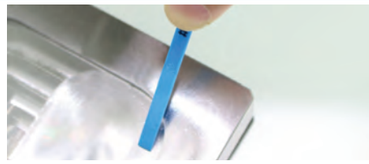

Size (mm) T x W x L	VIOLET (#80)	EMERALD (#120)	GOLD (#180)	L.BROWN (#300)	ORANGE (#400)	BROWN (#600)	BLUE (#800)	WHITE (#1000)	RED (#1200)	
0.8 x 4 x 100	NSV084	NSE084	NSG084	NSL084	NSO084	NSP084	NSB084	NSW084	NSR084	1
0,8 x 4 x 150	NSV084L	NSE084L	NSG084L	NSL084L	NSO084L	NSP084L	NSB084L	NSW084L	NSR084L	1
0.8 x 6 x 100	NSV086	NSE086	NSG086	NSL086	NSO086	NSP086	NSB086	NSW086	NSR086	1
0.8 x 6 x 150	NSV086L	NSE086L	NSG086L	NSL086L	NSO086L	NSP086L	NSB086L	NSW086L	NSR086L	1
1.0 x 4 x 100	NSV104	NSE104	NSG104	NSL104	NSO104	NSP104	NSB104	NSW104	NSR104	1
1.0 x 4 x 150	NSV104L	NSE104L	NSG104L	NSL104L	NSO104L	NSP104L	NSB104L	NSW104L	NSR104L	1
1.0 x 6 x 100	NSV106	NSE106	NSG106	NSL106	NSO106	NSP106	NSB106	NSW106	NSR106	1
1.0 x 6 x 150	NSV106L	NSE106L	NSG106L	NSL106L	NSO106L	NSP106L	NSB106L	NSW106L	NSR106L	1
1.5 x 4 x 100	NSV154	NSE154	NSG154	NSL154	NSO154	NSP154	NSB154	NSW154	NSR154	1
1.5 x 4 x 150	NSV154L	NSE154L	NSG154L	NSL154L	NSO154L	NSP154L	NSB154L	NSW154L	NSR154L	1
1.5 x 6 x 100	NSV156	NSE156	NSG156	NSL156	NSO156	NSP156	NSB156	NSW156	NSR156	1
1.5 x 6 x 150	NSV156L	NSE156L	NSG156L	NSL156L	NSO156L	NSP156L	NSB156L	NSW156L	NSR156L	1

Round Type

Size (mm) D x L	VIOLET (#80)	EMERALD (#120)	GOLD (#180)	L.BROWN (#300)	ORANGE (#400)	BROWN (#600)	BLUE (#800)	WHITE (#1000)	RED (#1200)	
3,0 x 100	NSVD3B	NSED3B	NSGD3B	NSLD3B	NSOD3B	NSPD3B	NSBD3B	NSWD3B	NSRD3B	1
3,0 x 150	NSVD3BL	NSED3BL	NSGD3BL	NSLD3BL	NSOD3BL	NSPD3BL	NSBD3BL	NSWD3BL	NSRD3BL	1

Stone Holders

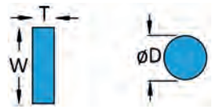

Part No.	W (mm)	T (mm)	D (mm)	
SSH-4	4	0,5 - 3	-	1
SSH-6	6	0,5 - 3	-	1
SNH-30	-	-	Ø3	1

Gate Cutters	p. 291	Accessories	p. 297	Measuring Tools	p. 318
Deburring Tools	p. 294	**Polishing & Abrasives**	**p. 298**	Magnifying Glasses	p. 319
Soft Tools	p. 295	Brushes	p. 313		
Pry Bars	p. 296	Compressed Air Blow Guns	p. 317		

Grinding and polishing stones Gesswein® EDM BLUE

Premium aluminium oxide stones. The hardest Gesswein® stones. Ideal for use with hand-filing machines and ultrasonic polishing systems. As these stones are a lot harder than the EDM series, they are better suited for the quick removal of hard erosion skin. Optimum results in conjunction with fluid.

Grinding and Polishing Stones Gesswein® EDM BLUE

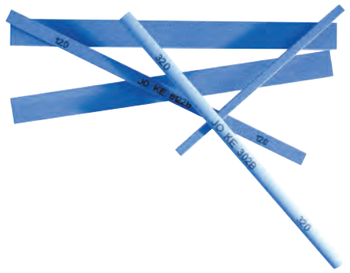

	Part No.	Dimensions	Grit size	Type	
Square	**M-15312**	4 x 4 x 100 mm	120	EDM BLUE 61	12
	M-15314	4 x 4 x 100 mm	180	EDM BLUE 62	12
	M-15316	4 x 4 x 100 mm	220	EDM BLUE 622	12
	M-15318	4 x 4 x 100 mm	320	EDM BLUE 63	12
	M-15320	4 x 4 x 100 mm	400	EDM BLUE 64	12
	M-15322	4 x 4 x 100 mm	600	EDM BLUE 66	12
	M-15324	6 x 6 x 150 mm	120	EDM BLUE 6122	12
	M-15326	6 x 6 x 150 mm	180	EDM BLUE 6182	12
	M-15328	6 x 6 x 150 mm	220	EDM BLUE 6202	12
	M-15330	6 x 6 x 150 mm	320	EDM BLUE 6302	12
	M-15332	6 x 6 x 150 mm	400	EDM BLUE 6402	12
	M-15334	6 x 6 x 150 mm	600	EDM BLUE 6602	12
Round	**M-15348**	Ø 6 x 150 mm	120	EDM BLUE E122	12
	M-15350	Ø 6 x 150 mm	180	EDM BLUE E182	12
	M-15352	Ø 6 x 150 mm	320	EDM BLUE E302	12
Rectangular	**M-15336**	13 x 6 x 150 mm	120	EDM BLUE 6124	12
	M-15338	13 x 6 x 150 mm	180	EDM BLUE 6184	12
	M-15340	13 x 6 x 150 mm	220	EDM BLUE 6204	12
	M-15342	13 x 6 x 150 mm	320	EDM BLUE 6304	12
	M-15344	13 x 6 x 150 mm	400	EDM BLUE 6404	12
	M-15346	13 x 6 x 150 mm	600	EDM BLUE 6604	12

Bonding

1	2	3	4	(5)
Soft				Hard

Stock removal

1	2	3	(4)	5
Soft				Hard

Wear

1	(2)	3	4	5
Soft				Hard

Application

1	(2)	3	4	5
Soft				Hard

Tools & Accessories | Polishing & Abrasives

Gate Cutters	p. 291	Accessories	p. 297	Measuring Tools	p. 318
Deburring Tools	p. 294	**Polishing & Abrasives**	**p. 298**	Magnifying Glasses	p. 319
Soft Tools	p. 295	Brushes	p. 313		
Pry Bars	p. 296	Compressed Air Blow Guns	p. 317		

Grinding and polishing stones Gesswein® DIEMAKER

The original "diemaker stones". Medium hard aluminium oxide combined with a semi-soft bond results in a DF stone quality with high dimensional stability and existing contours are therefore easily rectified. They are mainly used for cutting and punching tools, but are also very suitable for mould and tool making.

Grinding and Polishing Stones Gesswein® EDM

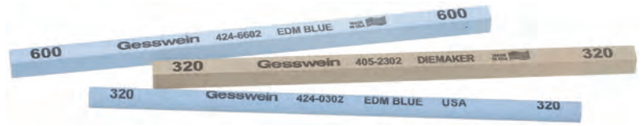

	Part No.	Dimensions	Grit size	Type	
Square	**M-15354**	4 x 4 x 100 mm	220	DIEMAKER 2	12
	M-15356	4 x 4 x 100 mm	320	DIEMAKER 3	12
	M-15358	4 x 4 x 100 mm	400	DIEMAKER 4	12
	M-15360	4 x 4 x 100 mm	600	DIEMAKER 6	12
	M-15362	4 x 4 x 100 mm	800	DIEMAKER 8	12
	M-15364	4 x 6 x 150 mm	900	DIEMAKER 9	12
	M-15365	6 x 6 x 150 mm	150	DIEMAKER 2102	12
	M-15366	6 x 6 x 150 mm	220	DIEMAKER 2202	12
	M-15368	6 x 6 x 150 mm	320	DIEMAKER 2302	12
	M-15370	6 x 6 x 150 mm	400	DIEMAKER 2402	12
	M-15372	6 x 6 x 150 mm	600	DIEMAKER 2602	12
	M-15374	6 x 6 x 150 mm	900	DIEMAKER 2902	12
	M-15375	10 x 10 x 150 mm	150	DIEMAKER 2108	12
	M-15376	10 x 10 x 150 mm	220	DIEMAKER 2208	12
	M-15378	10 x 10 x 150 mm	320	DIEMAKER 2308	12
	M-15380	10 x 10 x 150 mm	400	DIEMAKER 2408	12
	M-15382	10 x 10 x 150 mm	600	DIEMAKER 2608	12
	M-15384	10 x 10 x 150 mm	900	DIEMAKER 2908	12
	M-15385	13 x 13 x 150 mm	150	DIEMAKER 2105	12
	M-15386	13 x 13 x 150 mm	220	DIEMAKER 2205	12
	M-15388	13 x 13 x 150 mm	320	DIEMAKER 2305	12
	M-15390	13 x 13 x 150 mm	400	DIEMAKER 2405	12
Round	**M-15396**	Ø 6 x 150 mm	220	DIEMAKER 3202	12
	M-15398	Ø 6 x 150 mm	320	DIEMAKER 3302	12
	M-15400	Ø 6 x 150 mm	400	DIEMAKER 3402	12
	M-15402	Ø 6 x 150 mm	600	DIEMAKER 3602	12
	M-15404	Ø 6 x 150 mm	900	DIEMAKER 3902	12
	M-15406	Ø 10 x 150 mm	220	DIEMAKER 3208	12
	M-15408	Ø 10 x 150 mm	320	DIEMAKER 3308	12
	M-15410	Ø 10 x 150 mm	400	DIEMAKER 3408	12
	M-15412	Ø 10 x 150 mm	600	DIEMAKER 3608	12

Bonding

1	2	(3)	4	5
Soft				Hard

Wear

1	2	3	(4)	5
Soft				Hard

Stock removal

1	2	(3)	4	5
Soft				Hard

Application

1	2	3	(4)	5
Soft				Hard

Gate Cutters	p. 291	Accessories	p. 297	Measuring Tools	p. 318
Deburring Tools	p. 294	**Polishing & Abrasives**	**p. 298**	Magnifying Glasses	p. 319
Soft Tools	p. 295	Brushes	p. 313		
Pry Bars	p. 296	Compressed Air Blow Guns	p. 317		

Grinding and polishing stones Gesswein® MOLDMAKER / MOLDMAKER PLUS

These stones produce a semi-gloss surface. As abrasive for these stones, silicon carbide or Premium silicon carbide is used. The soft bonding results in fast cutting action and largely prevents clogging. Since these stones easily adapt to the required profile, they are ideal for outlines and radii.

Grinding and Polishing Stones Gesswein® MOLDMAKER

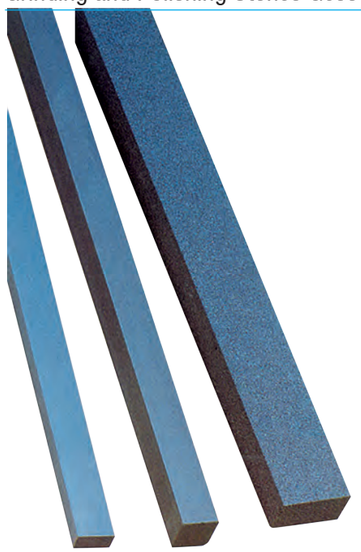

Bonding

1	2	3	4	(5)
Soft				Hard

Stock removal

1	2	3	4	(5)
Soft				Hard

Wear

1	(2)	3	4	5
Soft				Hard

Application

1	(2)	3	4	5
Soft				Hard

	Part No.	Dimensions	Grit size	Type	
Square	**M-15424**	6 x 6 x 150 mm	220	MOLDMAKER 1202	12
	M-15426	6 x 6 x 150 mm	320	MOLDMAKER 1302	12
	M-15428	6 x 6 x 150 mm	400	MOLDMAKER 1402	12
	M-15430	6 x 6 x 150 mm	600	MOLDMAKER 1602	12
Rectangular	**M-15432**	13 x 6 x 150 mm	220	MOLDMAKER 1204	12
	M-15434	13 x 6 x 150 mm	320	MOLDMAKER 1304	12
	M-15436	13 x 6 x 150 mm	400	MOLDMAKER 1404	12
	M-15438	13 x 6 x 150 mm	600	MOLDMAKER 1604	12

Tools & Accessories | Polishing & Abrasives

Gate Cutters	p. 291	Accessories	p. 297	Measuring Tools	p. 318
Deburring Tools	p. 294	**Polishing & Abrasives**	**p. 298**	Magnifying Glasses	p. 319
Soft Tools	p. 295	Brushes	p. 313		
Pry Bars	p. 296	Compressed Air Blow Guns	p. 317		

Economy Abrasive Coth Rolls Premium Corundum

Premium abrasive cloth delivered – on 50 m rolls. Likewise very flexible, yet with high edge stability and easy to tear to the desired size.

Premium Economy Abrasive Cloth Roll, 50 M, VSM, KK 114 F

Part No.	With	Grit Size	Design	
M-15138	25 mm	80	KK 114 F	1
M-15132	25 mm	120	KK 114 F	1
M-15140	25 mm	150	KK 114 F	1
M-15142	25 mm	180	KK 114 F	1
M-15144	25 mm	240	KK 114 F	1
M-15146	25 mm	320	KK 114 F	1
M-15148	25 mm	400	KK 114 F	1
M-15150	40 mm	80	KK 114 F	1
M-15134	40 mm	120	KK 114 F	1
M-15152	40 mm	150	KK 114 F	1
M-15154	40 mm	180	KK 114 F	1
M-15156	40 mm	240	KK 114 F	1
M-15158	40 mm	320	KK 114 F	1
M-15160	40 mm	400	KK 114 F	1
M-15162	50 mm	80	KK 114 F	1
M-15136	50 mm	120	KK 114 F	1
M-15164	50 mm	150	KK 114 F	1
M-15166	50 mm	180	KK 114 F	1
M-15168	50 mm	240	KK 114 F	1
M-15170	50 mm	320	KK 114 F	1
M-15172	50 mm	400	KK 114 F	1

Practical:
The grit sizes 60 to 400 are supplied in a cardboard dispenser with a cutting edge.

Use with or without coolant/lubricant!

Gate Cutters p. 291
Deburring Tools p. 294
Soft Tools p. 295
Pry Bars p. 296
Accessories p. 297
Polishing & Abrasives p. 298
Brushes p. 313
Compressed Air Blow Guns p. 317
Measuring Tools p. 318
Magnifying Glasses p. 319

Abrasive paper
Silicon carbide

The well-known wet abrasive paper. Owing to the very fine grit size, suitable up to the polishing stage.
Use wet and dry on all steels and nonferrous metals.
An insider's tip for aluminium!

Silicon Carbide Abrasive Paper

Part No.	Dimensions	Grit Size	Type	
M-15174	230 x 280 mm	150	991 C	50
M-15176	230 x 280 mm	180	991 C	50
M-15178	230 x 280 mm	220	991 C	50
M-15180	230 x 280 mm	240	991 C	50
M-15182	230 x 280 mm	280	991 C	50
M-15184	230 x 280 mm	320	991 C	50
M-15186	230 x 280 mm	400	991 C	50
M-15188	230 x 280 mm	500	991 C	50
M-15190	230 x 280 mm	600	991 C	50
M-15192	230 x 280 mm	800	991 C	50
M-15194	230 x 280 mm	1000	991 C	50
M-15196	230 x 280 mm	1200	991 C	50
M-15198	230 x 280 mm	2000	991 A	50
M-15200	230 x 280 mm	2500	991 A	50
M-15202	230 x 280 mm	3000	991 A	50
M-15204	230 x 280 mm	5000	991 A	50
M-15206	230 x 280 mm	1500	991 A	50
M-15208	230 x 280 mm	7000	991 A	50

Difference between A and C grades?

The A and C grade wet abrasive papers differ in the specific weight of the base:
- A ≤ 115 g/m2
- C > 115 g/m2

Use with or without coolant/lubricant!

Gate Cutters p. 291
Deburring Tools p. 294
Soft Tools p. 295
Pry Bars p. 296
Accessories p. 297
Polishing & Abrasives p. 298
Brushes p. 313
Compressed Air Blow Guns p. 317
Measuring Tools p. 318
Magnifying Glasses p. 319

Small Bore Cleaning Brush (Brass / Nylon) With Loop Handle

Part No. Brass	Part No. Nylon	Diameter	Brush Length	Total length	
-	**SN2**	2	100	300	1
SB3	**SN3**	3	100	300	1
SB4	**SN4**	4	100	300	1
SB5	**SN5**	5	100	300	1
SB6	**SN6**	6	100	300	1
SB8	**SN8**	8	100	300	1
SB10	**SN10**	10	100	300	1
SB12	**SN12**	12	100	300	1
SB15	**SN15**	15	100	300	1
SB20	**SN20**	20	100	300	1
SB25	**SN25**	25	100	300	1

Condenser Brush

Part No. Brass	Part No. Nylon	Diameter mm	Thread	Brush Length	Total Length	
CBB6	**CBN6**	6	M4	80	115	1
CBB8	**CBN8**	8	M6	80	115	1
CBB10	**CBN10**	10	M6	80	115	1
CBB12	**CBN12**	12	M6	80	115	1
CBB14	**CBN14**	14	M6	80	115	1
CBB16	**CBN16**	16	M6	80	115	1
CBB18	**CBN18**	18	M6	80	115	1
CBB20	**CBN20**	20	M6	80	115	1

Single Spiral Brush with thread, ideal for cleaning inside bores.

Hand Brush

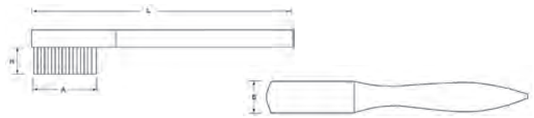

Part No.	Material	Rows	L	B	A	H	
HBM3-5	Brass	3 x 5	150	15	35	15	1
HBM5-10	Brass	5 x 10	190	24	55	12	1
HBM4-15	Brass	4 x 15	290	40	140	25	1

Allround brushes with wooden handle. Perfect for cleaning surfaces without damaging the Mould parts.

Gate Cutters	p. 291	Accessories	p. 297	Measuring Tools	p. 318
Deburring Tools	p. 294	Polishing & Abrasives	p. 298	Magnifying Glasses	p. 319
Soft Tools	p. 295	**Brushes**	**p. 313**		
Pry Bars	p. 296	Compressed Air Blow Guns	p. 317		

Pipe brushes
Nylon with silicon carbide

Pipe brushes

Pipe brushes are ideally suited for deburring and cleaning work in crossways drillings and insertions.
The flexible trimming made of nylon prevents breakage of the material even with the highest stress and deformation.

The pipe brushes are available in two different versions:

- nylon standard with silicon carbide
- nylon standard with corundum

Nylon Silicon Carbide Pipe Brushes - SiC

Part No.	Abrasive	Head d imensions	Grit size	Shank dimensions	Total length	Rotation speed max.	
M-15000	SiC	Ø 0.7 x 12 mm	K 1000	Ø 0.42 mm	100 mm	700 1/min	1
M-15002	SiC	Ø 1.2 x 12 mm	K 1000	Ø 0.47 mm	100 mm	700 1/min	1
M-15004	SiC	Ø 1.9 x 18 mm	K 1000	Ø 0.74 mm	100 mm	700 1/min	1
M-15006	SiC	Ø 2.2 x 18 mm	K 1000	Ø 0.94 mm	100 mm	700 1/min	1
M-15008	SiC	Ø 2.6 x 25 mm	K 1000	Ø 1.08 mm	100 mm	700 1/min	1
M-15010	SiC	Ø 3.2 x 25 mm	K 1000	Ø 1.66 mm	100 mm	700 1/min	1
M-15012	SiC	Ø 3.5 x 25 mm	K 1000	Ø 1.66 mm	100 mm	700 1/min	1

Using nylon pipe brushes smooths the surface and positively influences the latter for subsequent use. The twisted wire is zinc-coated. Linear use by hand and clockwise in machines.

Nylon-Crundum Pipe Brushes - Corundum

Part No.	Abrasive	Head d imensions	Grit size	Shank dimensions	Total length	Rotation speed max.	
M-15014	Corundum	Ø 4.4 x 25 mm	K 600	Ø 2.2 mm	125 mm	700 1/min	1
M-15016	Corundum	Ø 4.8 x 25 mm	K 600	Ø 2.2 mm	125 mm	700 1/min	1
M-15018	Corundum	Ø 5.5 x 25 mm	K 600	Ø 2.2 mm	125 mm	700 1/min	1
M-15020	Corundum	Ø 6.6 x 25 mm	K 600	Ø 3 mm	125 mm	700 1/min	1
M-15022	Corundum	Ø 8.2 x 25 mm	K 600	Ø 3 mm	125 mm	700 1/min	1
M-15024	Corundum	Ø 9.8 x 25 mm	K 600	Ø 3.4 mm	125 mm	700 1/min	1
M-15026	Corundum	Ø 11.5 x 25 mm	K 600	Ø 3.4 mm	125 mm	700 1/min	1
M-15028	Corundum	Ø 13.0 x 25 mm	K 600	Ø 4.2 mm	125 mm	700 1/min	1
M-15030	Corundum	Ø 16.0 x 25 mm	K 600	Ø 4.2 mm	125 mm	700 1/min	1
M-15032	Corundum	Ø 17.5 x 25 mm	K 600	Ø 4.2 mm	125 mm	700 1/min	1
M-15034	Corundum	Ø 19.4 x 25 mm	K 600	Ø 5.6 mm	125 mm	700 1/min	1
M-15036	Corundum	Ø 22.6 x 25 mm	K 600	Ø 5.6 mm	125 mm	700 1/min	1
M-15038	Corundum	Ø 25.8 x 25 mm	K 600	Ø 6.2 mm	125 mm	700 1/min	1

Using nylon pipe brushes smooths the surface and positively influences the latter for subsequent use. The twisted wire is zinc-coated. Linear use by hand and clockwise in machines.

Tools & Accessories | Brushes

Gate Cutters	p. 291	Accessories	p. 297	Measuring Tools	p. 318
Deburring Tools	p. 294	Polishing & Abrasives	p. 298	Magnifying Glasses	p. 319
Soft Tools	p. 295	**Brushes**	**p. 313**		
Pry Bars	p. 296	Compressed Air Blow Guns	p. 317		

Barrel Cleaning Brushes

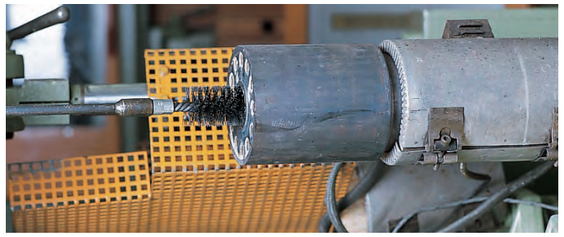

Part No.	Diameter mm	Diameter Inch	Thread	Brush Length	Total Length	
BC20	20	3/4”	W 3/8”	100	150	1
BC22	22	7/8”	W 3/8”	100	150	1
BC25	25	1”	W 3/8”	100	150	1
BC28	28	1-1/8”	W 3/8”	100	150	1
BC30	30	1-1/4”	W 1/2”	100	160	1
BC35	35	1-1/4”	W 1/2”	100	160	1
BC40	40	1-1/2”	W 1/2”	100	160	1
BC44	44	1-1/4”	W 1/2”	100	160	1
BC50	50	2”	W 1/2”	100	160	1
BC57	57	2-1/4”	W 1/2”	100	160	1
BC63	63	2-1/2”	W 1/2”	100	160	1
BC69	69	2-3/4”	W 1/2”	100	160	1
BC75	75	3”	W 1/2”	100	160	1
BC82	82	3-1/4”	W 1/2”	100	160	1
BC88	88	3-3/8”	W 1/2”	100	160	1
BC94	94	3-5/8”	W 1/2”	100	160	1
BC101	101	4”	W 1/2”	100	160	1
BC125	125	5”	W 1/2”	100	160	1
BC150*	150	6”	W 1/2”	100	160	1
BC200*	200	8”	W 1/2”	100	160	1

* Single Spiral.
Heavy Duty Double Spiral Steel Brush ideal for cleaning Barrel Cylinders of Injection Moulding Machines.

Handles and Extensions

Part No.	Thread	Type	Length	
HD1000	M4	Handle	1000 mm	1
ED1000	M4	Extension	1000 mm	1
HC1000	M6	Handle	1000 mm	1
EC1000	M6	Extension	1000 mm	1
HA1000	W 3/8”	Handle	1000 mm	1
EA1000	W 3/8”	Extension	1000 mm	1
HB1000	W 1/2”	Handle	1000 mm	1
EB1000	W 1/2”	Extension	1000 mm	1

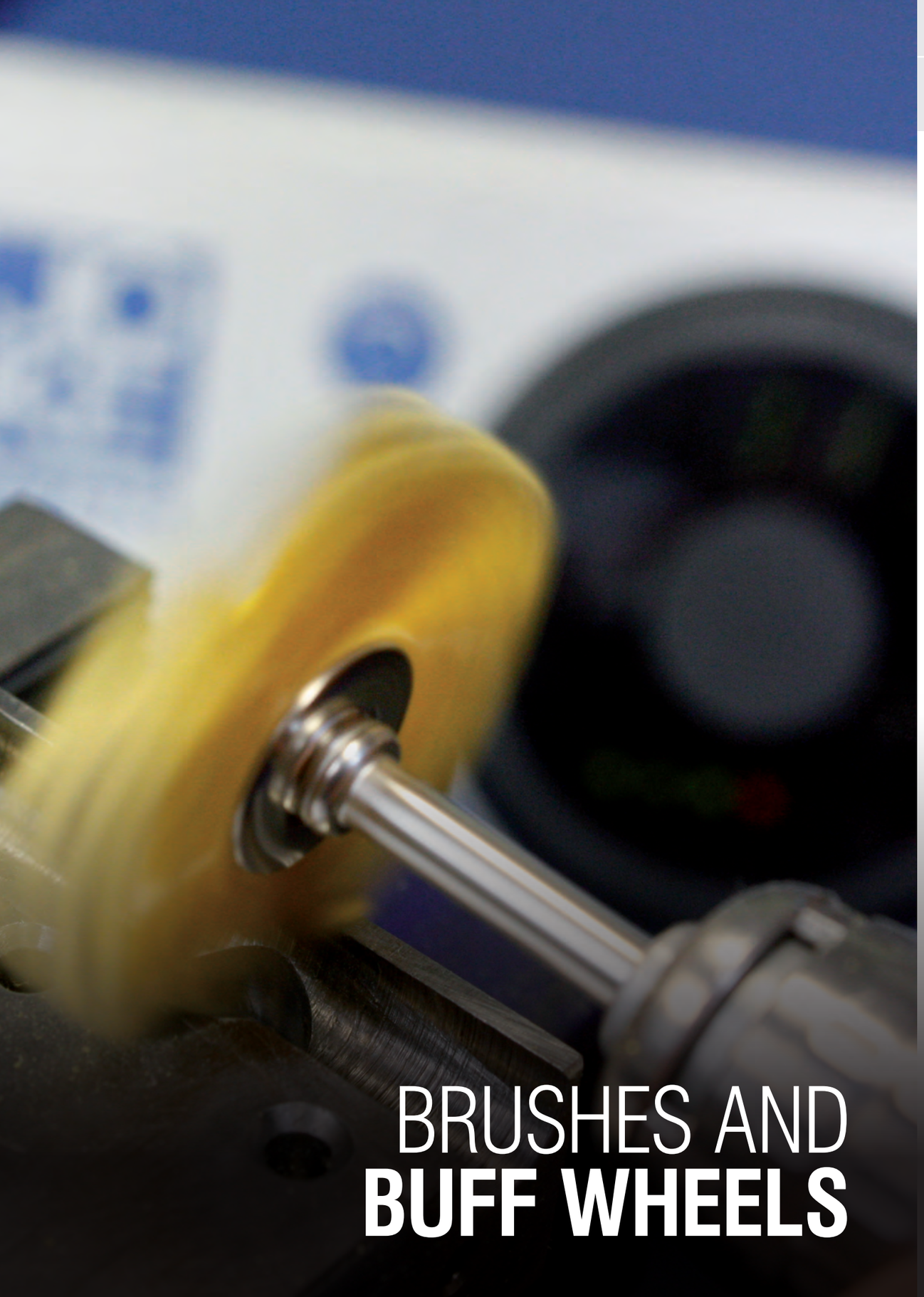

Gate Cutters	p. 291	Accessories	p. 297	Measuring Tools	p. 318
Deburring Tools	p. 294	Polishing & Abrasives	p. 298	Magnifying Glasses	p. 319
Soft Tools	p. 295	Brushes	p. 313		
Pry Bars	p. 296	**Compressed Air Blow Guns**	**p. 317**		

Blow Gun in Forged Aluminium

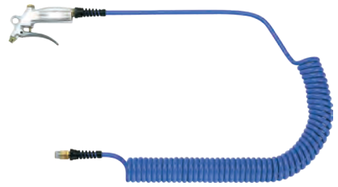

Part No.	Working Pressure	Tube size	Tube Extended Length	Tube Block Length	Connection	
MBG-S	15 Bar	6,5x10	6 m.	490 mm	R 1/4”	1

- Blow gun sets with Polyurethane Spiral Hose.
- Polyamide bend - and scratch protection.
- High quality, robust and handy design.
- Useful for all applications.

Blow Gun in Plastic

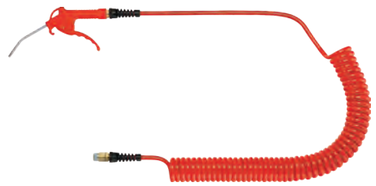

Part No.	Working Pressure	Tube size	Tube Extended Length	Tube Block Length	Connection	
MBG-P	15 Bar	6,5x10	6 m.	490 mm	R 1/4”	1

- Blow gun sets with Polyurethane Spiral Hose.
- Polyamide bend - and scratch protection.
- High quality, robust and handy design.
- Useful for all applications.

Gate Cutters	p. 291	Accessories	p. 297	**Measuring Tools**	**p. 318**
Deburring Tools	p. 294	Polishing & Abrasives	p. 298	Magnifying Glasses	p. 319
Soft Tools	p. 295	Brushes	p. 313		
Pry Bars	p. 296	Compressed Air Blow Guns	p. 317		

Digital Caliper 0-150 mm

Part No.	Range (mm)	Resolution	Battery	
DC150	0-150	0,01 mm	1,55V (SR44W)	1

Radius Gauge - Concave and Convex Form

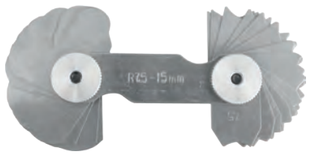

Part No.	Range (mm)	# Blades	
RG17	1,0-7,0	17	1
RG715	7,5-15,0	16	1
RG1525	15,5-25,0	15	1
RG2550	25,0-50,0	20	1

Thread Pitch Gauge - Metric, Whitworth, Pipe Thread

Part No.	Metric 60° Pitch/mm	Whitworth 55° Pitch/Inch	Pipe Thread 55° Pitch/Inch	# Blades	
SPG58	0,25-6,00	62-4	28RG-8RG	58	1

Steel Ruler 300 x 30 x 1,0 mm/Inch - Chrome Plated

Part No.	Length (mm)	Width (mm)	Thickness (mm)	
SR300	300	30	1	1

Gate Cutters	p. 291	Accessories	p. 297	**Measuring Tools**	**p. 318**
Deburring Tools	p. 294	Polishing & Abrasives	p. 298	**Magnifying Glasses**	**p. 319**
Soft Tools	p. 295	Brushes	p. 313		
Pry Bars	p. 296	Compressed Air Blow Guns	p. 317		

Mouldpro Tape Measure

Part No.	Coil length (m)	Width (mm)	
MPT5	5	19	1
MPT8	8	25	1

Professional Quality Tape Measure with chrome plated tough ABS plastic case and integrated thumb lock.
High visibility anti-glare blade with polymer coating to extend blade life. Class 2 Blade 19mm (5m) / 25mm (8m) Wide Blade Metric / Imperial Scale. Compact & Durable Case.
3-Rivet True-Zero End Hook Belt Clip.

Handheld Magnifier 2,5 x Ø90 mm – Glass Lens and 12 x Leds

Part No.	Magnification	Lens diamenter	# LED Lights	Dimensions	
HM90	2,5 X	Ø 90 mm	12 pcs.	241 x 110 x 14 mm	1

Material (lens): Glass.
Material (body): Metal (Zinc alloy).
Battery: 2 x AA 1,5 V (NOT included).
Packing: Black padded case.

Handheld Magnifier 3X/5X/7X - with LED Light

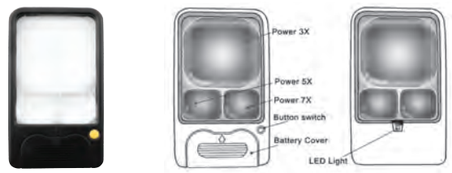

Part No.	Magnification	Lens diameter	# LED lights	Dimensions	
HM50	3X/5X/7X	50x50/20x25	1	117x61x9 mm	1

Material (body): ABS plastic.
Battery: 2 x CR2032 (included).
Battery life: Approx. 40-50 hours.

09. Machine Accessories

321 Mould Screens

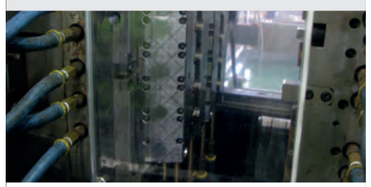

322 Ejector Couplings

325 Machine Mounts

326 Linear Transducers

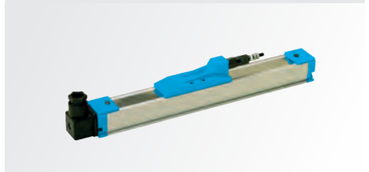

328 Hydraulic Iso Couplers

Mould Screens	**p. 321**	Linear Transducers	p. 326
Ejector Couplings	p. 322	Hydraulic Iso Couplers	p. 328
Machine Mounts	p. 325		

Mould Screens

Tested up to 3 million cycles

Part No.	Mould Height	Max Width	
SG-1	200 mm	550 mm	1 (set of 2 pcs)
SG-2	300 mm	550 mm	1 (set of 2 pcs)
SG-3	400 mm	550 mm	1 (set of 2 pcs)
SG-4	500 mm	550 mm	1 (set of 2 pcs)
SG-5	600 mm	550 mm	1 (set of 2 pcs)

Prevent Plastic Parts scattering around the moulding machine with Scatterguard. The patented new design contains the Ejected Parts within the Mould Area whilst the roller blind action allows a completely unrestricted view of the Mould Face.
Scatterguard allows easy access to the mould with the Ultra Low Profile Design meaning that the mould screens can be installed even when there are lots of water connectors on the side of the mould.
Supplied as a kit Scatterguard is simply installed with Magnetic Anchors and is easily movable to other Moulding Machines.

- Ultra Low Profile Design.
- Crystal Clear Mould Screen.
- Reduce Scrap by Eliminating Contamination and Increase Profits.
- Ideal for Cleanroom Applications.

Mould Screens	**p. 321**	Linear Transducers	p. 326
Ejector Couplings	p. 322	Hydraulic Iso Couplers	p. 328
Machine Mounts	p. 325		

Description:
The UKM is a mechanical ejector coupling for plastic injection moulding machines. Its function is to lock the ejector bars of the injection moulding tool.

- The coupling process "locking or unlocking" takes place in only seconds.
- Simple construction - easy to install
- Available with M10 – M12 and M16 thread.

Material:
Steel Type: 1.2510

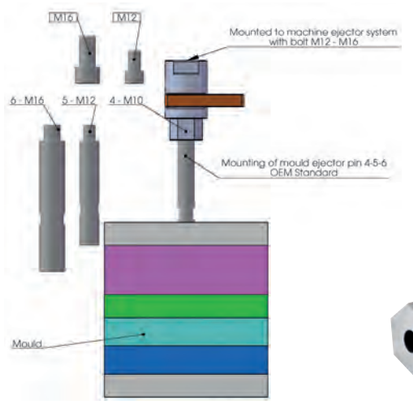

Connector Nipple

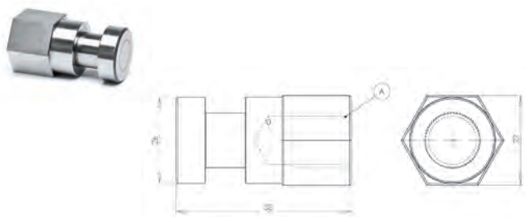

Part No.	A	
UKM10HAN	M10	1
UKM12HAN	M12	1
UKM16HAN	M16	1

Locking Slide

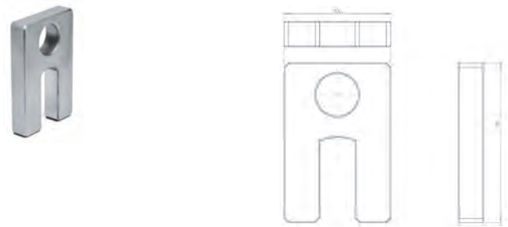

Part No.	SIZE	
UKKILE	One Size	1

Coupling

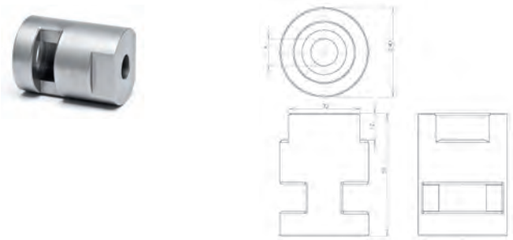

Part No.	A	
UKM12HUN	12	1
UKM16HUN	16	1

Machine Accessories | Ejector Couplings

Mould Screens	p. 321	Linear Transducers	p. 326
Ejector Couplings	**p. 322**	Hydraulic Iso Couplers	p. 328
Machine Mounts	p. 325		

Ideal for use with: Quick Mould Change systems and Two-stage Ejection

Designed to provide a quick method of attaching the ejector plate in your mould to the ejection system in your moulding machine. Provides positive ejector plate return while greatly reducing set-up time.

Perfectly suited for those moulding machines where the ejector plate on the machine is difficult to reach. Ideal when center ejection is desired, but impossible to "tie-in". Works with either hydraulic or mechanical ejection.

Uses and Advantages
- Quick and easy installation (even on existing moulds). Return of the ejector plate is assured.
- Part ejector plate is assured.
- Coupling is obtained in any position, disconnecting is after the ejector plate is fully returned.
- Fast acting up to 30 strokes/minute. No wearing parts.
- Can be used on all injection machines equipped with hydraulic or mechanical ejection.
- Set-up time can be greatly reduced.
- Reduce noise on machines with mechanical knockouts. Especially suited for injection machines that do not have easy access to the ejector plate.
- Allows for center ejection to be tied in.
- No Grease should be applied to these Products.

Sequence of operation

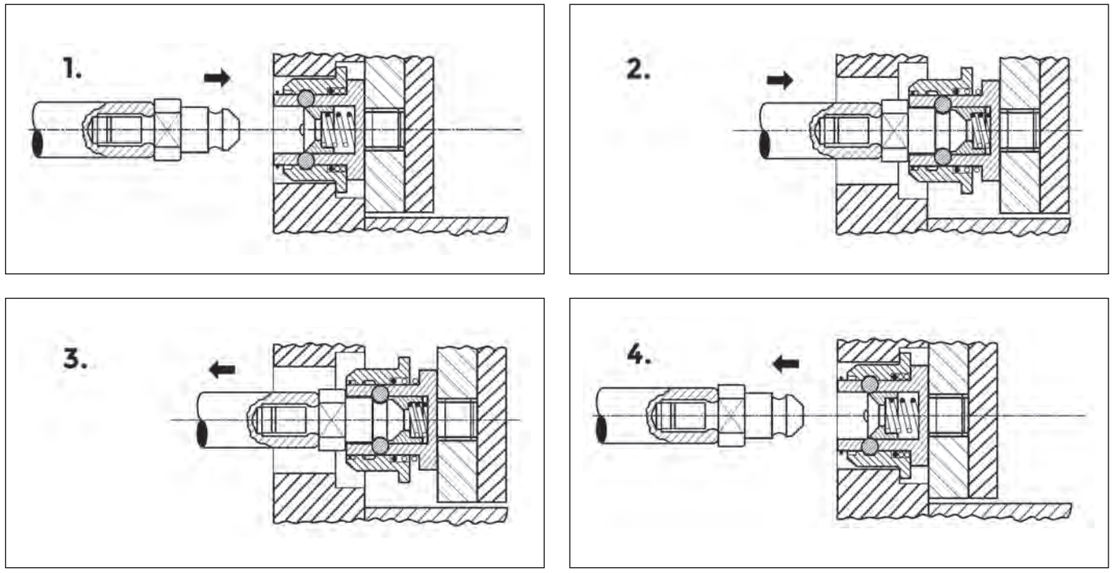

Mould Screens p. 321
Ejector Couplings p. 322
Machine Mounts p. 325
Linear Transducers p. 326
Hydraulic Iso Couplers p. 328

Ejector Coupling

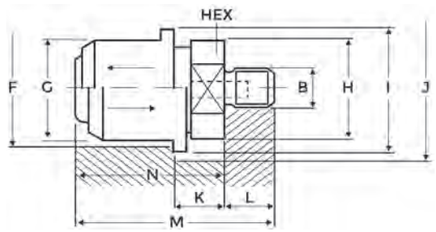

Part No.	B	F	G	H	I	J	K	L	M	Pull Force	Size	
EJC-F-1-1	M12X1,75	34	34	32	39	43	9	15	42,5	1500 kg	1	1
EJC-F-1-2	M16X1,5	34	34	32	39	43	9	15	42,5	1500 kg	1	1
EJC-F-1-3	M16X2	34	34	32	39	43	9	15	42,5	1500 kg	1	1
EJC-F-2-1	M16X1,5	40	40	38	48	53	13	15	52	2400 kg	2	1
EJC-F-2-2	M16X2	40	40	38	48	53	13	15	52	2400 kg	2	1
EJC-F-3-1	M16X1,5	58	58	56	65	70	17	18	68	3200 kg	3	1
EJC-F-3-2	M16X2	58	58	56	65	70	17	18	68	3200 kg	3	1
EJC-F-3-3	M18X1,5	58	58	56	65	70	17	18	68	3200 kg	3	1
EJC-F-3-4	M20X1,5	58	58	56	65	70	17	18	68	3200 kg	3	1
EJC-F-3-5	M20X2,5	58	58	56	65	70	17	18	68	3200 kg	3	1
EJC-F-3-6	M24X1,5	58	58	56	65	70	17	18	68	3200 kg	3	1
EJC-F-3-7	M27X1,5	58	58	56	65	70	17	18	68	3200 kg	3	1
EJC-F-3-8	M30X1,5	58	58	56	65	70	17	18	68	3200 kg	3	1

Material: 1.7147 - 60 HRC.

Pneumatic Ejector Coupling

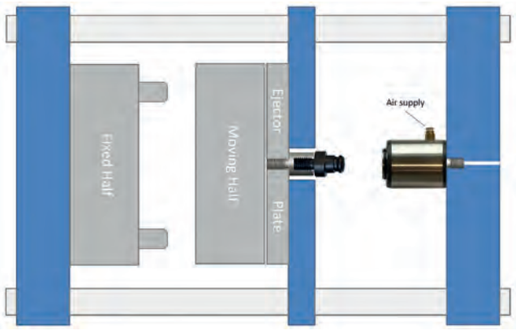

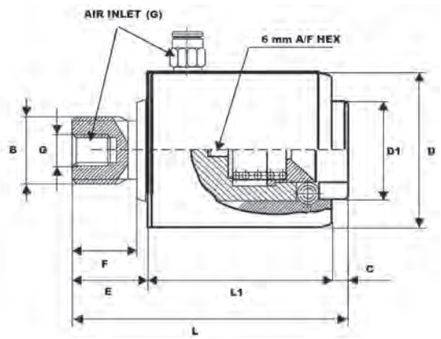

Part No.	D	D1	L	L1	E	F	B	G 4-6 Bar	Pull Force	Size	
EJC-FP-200	48	39	68	28,5	21	15	M16x2	R1/8"	2700 kg	2	1
EJC-FP-205	48	39	68	28,5	21	15	M18x1,5	R1/8"	2700 kg	2	1
EJC-FP-300	58	36	94	66	22,5	20	M20X1,5	R1/8"	3400 kg	3	1
EJC-FP-305	58	36	94	66	22,5	20	M20X2,5	R1/8"	3400 kg	3	1

Ejector Coupling to ensure rapid and safe mould changes designed to fit with standard EJC-M connectors.
The EJC-FP coupling is air operated. The coupling connects mechanical to the plug EJC-M, and disconnected using air in one of the 2 ports.
The Unit EJC-FP is installed on the machine and the plug EJC-M is installed on the mould/rod.

Mould Screens p. 321
Ejector Couplings p. 322
Machine Mounts p. 325
Linear Transducers p. 326
Hydraulic Iso Couplers p. 328

Ejector Nipple

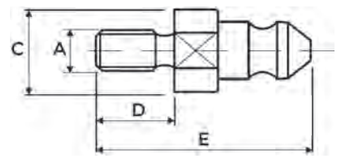

Part No.	A	C	D	E	Pull Force	Size	
EJC-M-1-1	M10X1,5	22,8	20	45,5	1500 kg	1	1
EJC-M-1-2	M12X1,75	22,8	20	45,5	1500 kg	1	1
EJC-M-1-3	M14X2	22,8	20	45,5	1500 kg	1	1
EJC-M-1-4	M16X2	22,8	20	45,5	1500 kg	1	1
EJC-M-2-1	M10X1,5	25,8	20	55	2400 kg	2	1
EJC-M-2-2	M12X1,75	25,8	20	55	2400 kg	2	1
EJC-M-2-3	M14X2	25,8	20	55	2400 kg	2	1
EJC-M-2-4	M16X2	25,8	20	55	2400 kg	2	1
EJC-M-3-1	M16X2	35	25	68	3200 kg	3	1
EJC-M-3-2	M18X2,5	35	25	68	3200 kg	3	1
EJC-M-3-3	M20X2,5	35	25	68	3200 kg	3	1
EJC-M-3-4	M24X3	35	25	68	3200 kg	3	1
EJC-M-3-5	M27X3	35	25	68	3200 kg	3	1
EJC-M-3-6	M30X3,5	35	25	68	3200 kg	3	1

Material: 1.7147 - 60 HRC.

Standard Machine Mounts - Supplied with Adjusting Screws

Part No.	Diameter	Load (kg)	Adjusting Screw	Height	
SMM01	80mm	200 kg	M12x1.25x120	38-50mm	1
SMM02	120mm	400 kg	M16x1.5x120	46-59mm	1
SMM03	160mm	1000 kg	M20x1.5x170	53-68mm	1
SMM04	160mm	2500 kg	M20x1.5x170	54-69mm	1
SMM05	200mm	3800 kg	M20x1.5x170	56-71mm	1

Up to 15 mm Adjustment.
Galvanised Steel Finish.
Supplied Complete with Adjusting Screw.

Transducer with Rod

Technical data	
Measurement Stroke	30 to 1250 mm
Linearity	± %0,05
Repeatability	< 0,01 mm
Resolution	Infinite
Resistance	5 kOhm
Resistance Tolerance	±%20
Load Resistance	100 kOhm min.
Recommended Cursor Current	< 1 µA
Permissible Applied Voltage	28VDC max.
Electrical Connections	4 pole hydraulic type connector
Displacement Speed	<5 m/s
Mechanical Life	100 million cycles
Case Dimensions	33 mm x 33 mm
Case Material	Anodized aluminium
Rod Material	Stainless Steel
Rod Diameter	Ø 6 mm
Mechanical Fixing	Variable brackets
IP Degree	IP 65
Operating Temperature	-20°C ... +80°C
Storage Temperature	-30°C ... +90°C

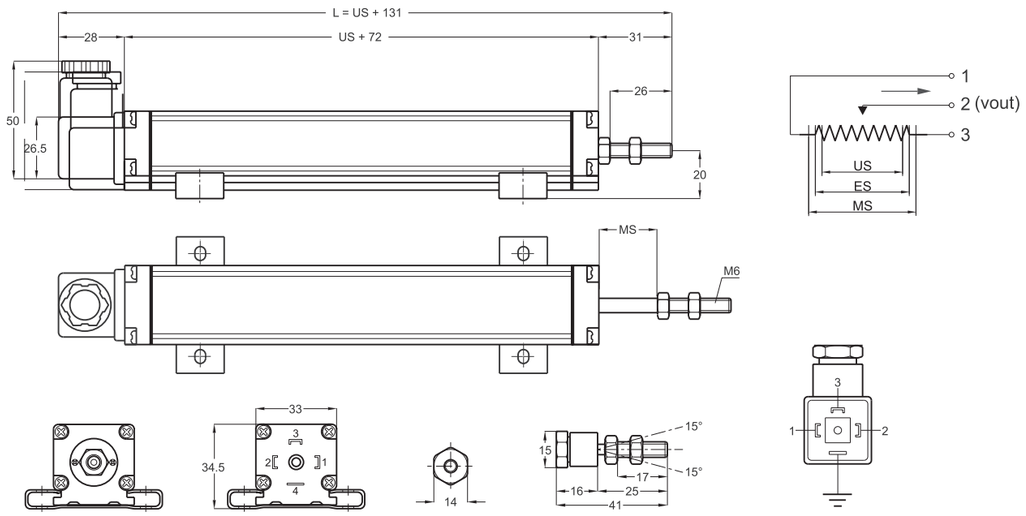

Part No.	US (usefull stroke)	MS (Mechanical stroke)	L (total length)	
MPT100	100	103	231	1
MPT150	150	153	281	1
MPT175	175	178	306	1
MPT200	200	203	331	1
MPT300	300	303	431	1
MPT400	400	403	531	1
MPT500	500	503	631	1

Machine Accessories | Linear Transducers

Mould Screens p. 321
Ejector Couplings p. 322
Machine Mounts p. 325
Linear Transducers p. 326
Hydraulic Iso Couplers p. 328

Transducer without Rod

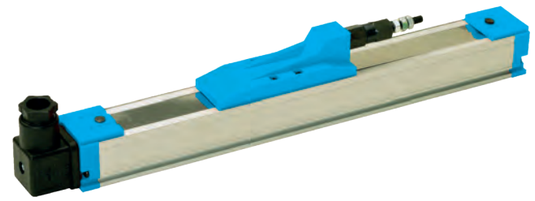

Technical data	
Measurement Stroke	100 to 1500 mm
Linearity	± %0,05
Repeatability	< 0,01 mm
Resolution	Infinite
Resistance	5 kOhm
Resistance Tolerance	±%20
Load Resistance	100 kOhm min.
Recommended Cursor Current	< 1 µA
Permissible Applied Voltage	28VDC max.
Electrical Connections	4 pole hydraulic type connector
Displacement Speed	<1,5 m/s
Mechanical Life	100 million cycles
Case Dimensions	33 mm x 33 mm
Case Material	Anodized aluminium
Mechanical Fixing	Variable brackets
IP Degree	IP 40 /If mounted upside down IP 53
Operating Temperature	-20°C ... +80°C
Storage Temperature	-30°C ... +90°C

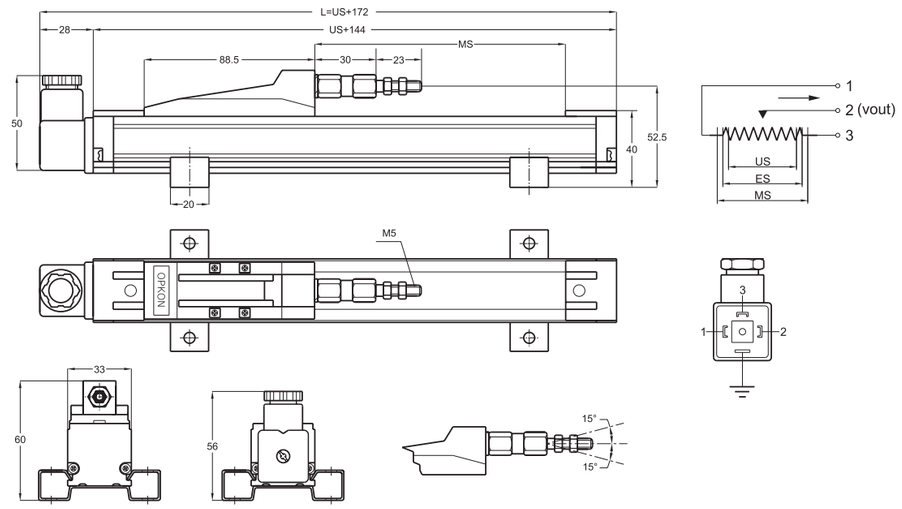

Part No.	US (usefull stroke)	MS (Mechanical stroke)	L (total length)	
MPH150	150	154	322	1
MPH200	200	204	372	1
MPH225	225	229	397	1
MPH300	300	304	472	1
MPH400	400	404	572	1
MPH500	500	504	672	1

Mould Screens p. 321
Ejector Couplings p. 322
Machine Mounts p. 325
Linear Transducers p. 326
Hydraulic Iso Couplers p. 328

Hydraulic Coupling Type BPX

Operating Temperature: -30°C to + 100°C (NBR)

Fluid: Water, Oil

Double valve

Chart

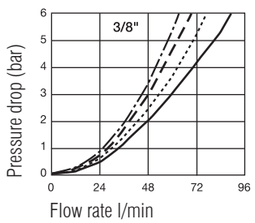

Flow with 32cSt viscosity oil at 40°C according to ISO 7242-2 - 2000

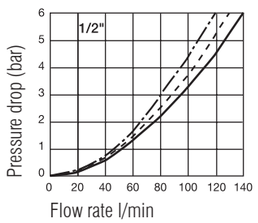

- FEM standard
- Pressure eliminator on both sides
- Pressure eliminator on the female coupler side
- Pressure eliminator on the male coupler side
- Single-sided pressure eliminator (no difference in pressure loss/flow for the couplings)

Technical Description

The profile of the male couplers in the FEM, FEC, and IF series complies with ISO 16028 standards. These couplers feature leakfree connection and disconnection. Thanks to the valve design, these couplers have reduced pressure drop, resulting in energy savings. They are available in standard versions made of steel as well as stainless steel.

Advantages

- Can be connected with one hand.
- Safety lock to prevent accidental disconnection.
- FEC with pressure eliminator provides effortless connection under static pressure (up to the working pressure).
- FEMP and FECP with "push-pull" system are the best solution for multi-coupler systems or when the coupler is fixed to an installation.

Machine Accessories | BPX Hydraulic Coupling Series

Mould Screens p. 321
Ejector Couplings p. 322
Machine Mounts p. 325
Linear Transducers p. 326
Hydraulic Iso Couplers p. 328

Couplings BSP Female Thread

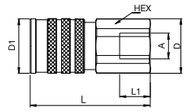

Part No.	Size	Thread size	HEX mm	L mm	L1 mm	D	D1	Bar
BPXC1414	1/4''	G 1/4	27	64	12	29,5	29	315
BPXC3838	3/8''	G 3/8	30	71	12	32	32	250
BPXC3812	3/8''	G 1/2	30	73	14	32	32	250
BPXC1212	1/2''	G 1/2	36	76	14	40	39	250
BPXC1234	1/2''	G 3/4	36	80	16	40	39	250

Plug BSP Female Thread

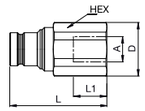

Part No.	Size	Thread size	HEX mm	L mm	L1 mm	D	D1	Bar
BPXA1414	1/4''	G 1/4	22	22	12	24,5	-	315
BPXA3838	3/8''	G3/8	30	30	12	32	-	250
BPXA3812	3/8''	G 1/2	30	30	12	32	-	250
BPXA1212	1/2''	G 1/2	36	66	14	40	-	250
BPXA1234	1/2''	G 3/4	36	70	16	40	-	250

9
Machine Accessories

Mould Screens p. 321
Ejector Couplings p. 322
Machine Mounts p. 325
Linear Transducers p. 326
Hydraulic Iso Couplers p. 328

Hydraulic Coupling Type A/B

Operating Temperature: -25°C to + 125°C

Fluid: Water, Oil

Double valve

Chart

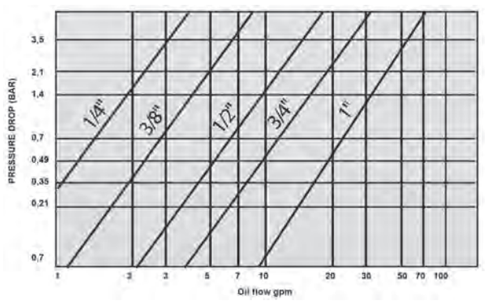

Technical Description

ISO A and B are families of quick couplings for hydraulic systems. A manually-operated locking ring provides extra security against involuntary disconnection. Both series are made of steel with Zinc-Nickel surface for maximum durability in tough applications and environments.

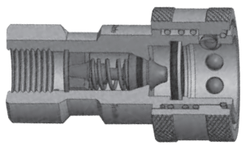

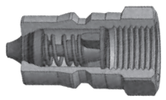

Machine Accessories | Hydraulic Coupling Type A/B

Mould Screens p. 321
Ejector Couplings p. 322
Machine Mounts p. 325
Linear Transducers p. 326
Hydraulic Iso Couplers p. 328

ISO A Couplers

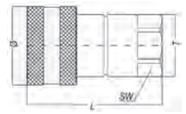

Part	T	Ø	L	SW	Bar	
FISO-A14BSP	G 1/4"	22	34,2	19	400	1
FISO-A38BSP	G 3/8"	24	39	22	300	1
FISO-A12BSP	G 1/2"	30	44	27	250	1
FISO-A34BSP	G 3/4"	38	55	36	250	1
FISO-A100BSP	G 1"	45	65,5	41	230	1

Material:
Steel (plated).

ISO A Plugs

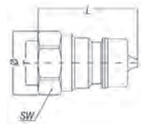

Part	Ø	SW	L	Bar	
MISO-A14BSP	G 1/4"	19	50	400	1
MISO-A38BSP	G 3/8"	22	57	300	1
MISO-A12BSP	G 1/2"	27	66	250	1
MISO-A34BSP	G 3/4"	34	82,5	250	1
MISO-A100BSP	G 1"	41	100	230	1

ISO B Couplers

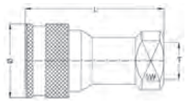

Part	T	Ø	L	Bar	
FISO-B14BSP	G 1/4"	28,2	55,3	350	1
FISO-B38BSP	G 3/8"	34	31	300	1
FISO-B12BSP	G 1/2"	10	40,5	250	1

Material:
Steel (plated).

ISO B Plugs

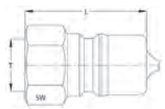

Part	T	SW	L	Bar	
MISO-B14BSP	G 1/4"	19	35	350	1
MISO-B38BSP	G 3/8"	22	39	300	1
MISO-B12BSP	G 1/2"	27	44	250	1

10. Mould Clamping

333 Power Clamps

335 Mechanical Clamps

337 Nuts & Washers

338 Straight Studs

339 T-Nuts

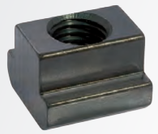

Power Clamps	**p. 333**	Straight Studs	p. 338
Mechanical Clamps	p. 335	T-Nuts	p. 339
Nuts & Washers	p. 337		

Power Sliding Clamp – Supplied without Inbus Bolt

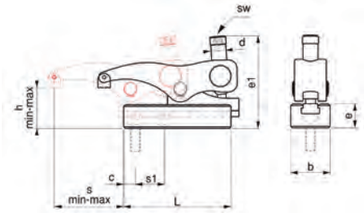

Part No.	Inbus Bolt Size (m) (not included)	h-Min	h-Max	s	e1	d	sw	L	e	b	c	"Clamping force Kgf"	
SC-100	M10-M12	0	50	12-66	100	M14	8	104	35,5	38	13	1600	1
SC-200	M12-M16	0	60	15-83	113	M18	10	128	38	48	16	2000	1
SC-250	M16-M20	0	65	18-96	125	M20	12	140	42	55	18	2500	1
SC-300	M20-M24	20	80	22-95	175	M24	12	178	55	74	24	5500	1

Used to facilitate quicker mould changes the Power Sliding Clamp offers an incredibly cost effective solution.
Features:
- Can accommodate a range of different back-plate sizes and thicknesses
- Perfect for clamping of injection moulds
- Use in threaded platens or t-slot platens
- Clamp slides by virtue of Integral t-slot

Inbus Bolt For Power Clamps

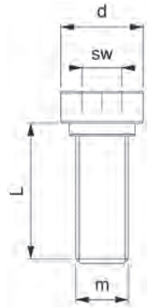

Part No.	m	L	d	SW	Clamp Ref	
1120-310	M10	29	16,5	8	SC-100	1
1120-312	M12	29	16,5	8	SC-100	1
1130-412	M12	30	20,5	10	SC-200	1
1130-416	M16	34	20,5	10	SC-200	1
1150-516	M16	34	24,5	12	SC-250	1
1150-518	M18	38	24,5	12	SC-250	1
1150-520	M20	38	24,5	12	SC-250	1
1160-620	M20	45	34	12	SC-300	1
1160-624	M24	45	34	12	SC-300	1
1160-724	M24	55	34	12	SC-300	1

Material: 41 Cr 4 DIN
Quality: 10.9
Surface: Black Coating

T-Nut For Inbus Bolt

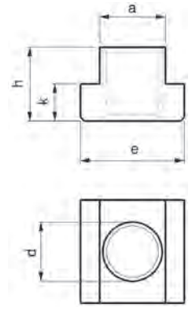

Part No.	D x Nut	a	e	h	k	
508-10x12	M10X12	11,7	18	14	7	1
508-12x14	M12X14	13,7	22	16	8	1
508-12x16	M12X16	15,7	25	18	9	1
508-12x18	M12X18	17,7	28	20	10	1
508-16x20	M16X20	19,7	32	24	12	1
508-16x22	M16X22	21,7	35	28	14	1
508-16x24	M16X24	23,7	40	32	16	1
508-16x28	M16X28	27,7	44	36	18	1
508-20x22	M20X22	21,7	35	28	14	1
508-20x24	M20X24	23,7	40	32	16	1
508-24x28	M24X28	27,7	44	36	18	1
508-24x36	M24X36	35,6	54	44	22	1

Clamp Calculation Guide

Power Clamp For Injection Moulding

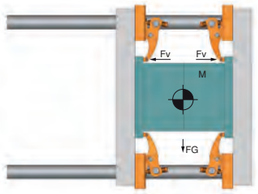

Formula Calculator

$\frac{M \times FG}{1000}$ = kN $\frac{2500 \times 9.81}{1000}$ (kg) = 24.52 kN

$\frac{kN}{\mu}$ = Result $\frac{24.52}{0.14}$ = 175.14 kN

$\frac{Result}{Fv}$ =Number of Clamp $\frac{175.14\ kN}{25\ kN}$ = 7 Clamp (use 8 pcs)

Power Clamp For Press Moulding

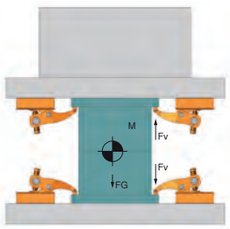

Formula Calculator

$\frac{M \times FG}{1000}$ = kN $\frac{5000 \times 9.81}{1000}$ (kg) = 49.050 kN

$\frac{kN}{\mu}$ = Result (upper %60) (lower % 40) $\frac{49.05}{0.14}$ = 350.35 kN (% 60 upper = 210.21) (% 40 lower = 140.14)

$\frac{Result}{Fv}$ = Number of Clamp $\frac{210.21\ kN}{25\ kN}$ (upper) = 8 Number of Clamp

$\frac{Result}{Fv}$ = Number of Clamp $\frac{140.14\ kN}{25\ kN}$ (lower) = 5.6 Clamp (use 6 pcs)

Force Diagram

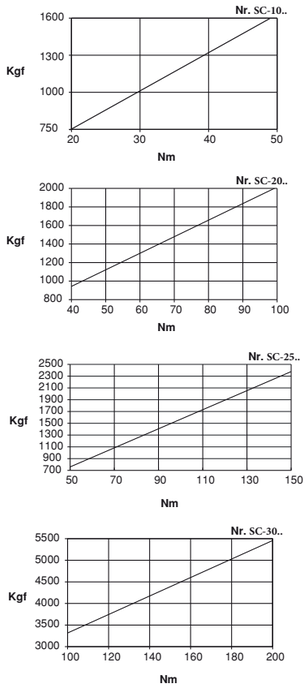

S-Clamp

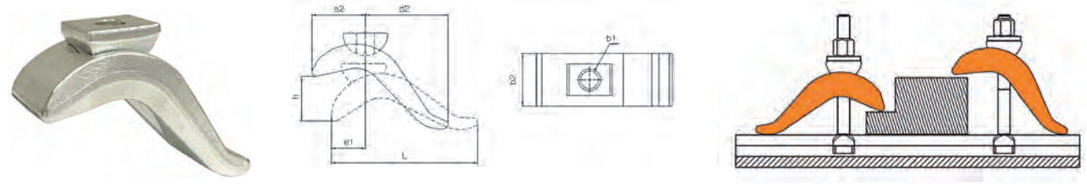

Part No.	b1	For Clamp Screw	b2xL	d	e1	e2	h	Weight (g)	
S200-17	17	M12-M16	50x140	60	30	55	75	900	1
S200-21	21	M20	60x175	80	40	70	85	1600	1

Materials:
Forged Steel, Hardened, Zinc Coated

Stepped Clamp

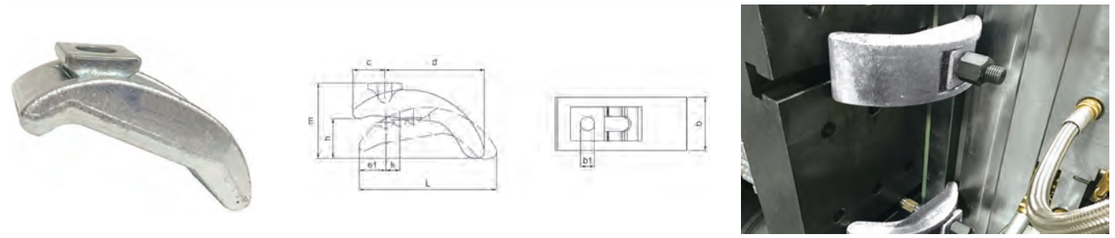

Part No.	b1	For Clamp Screw	m	h	b x L	c	d	e1	k x3	Weight (Kg)	
SP200-17	17	M16	93	15-50	65x165	39	128	30	17	2,1	1
SP200-21	21	M20	111	20-65	75x189	43	146	33	19	3,2	1
SP200-25	25	M24	126	20-75	85x213	49	164	39	21	4,5	1
SP200-31	31	M30	143,5	20-85	95x238	56	182	46	23	6,3	1

Supportless Clamp for clamping hights 15-85 mm.

Materials:
Forged Steel, Hardened, Zinc Coated

”Crocodile” Clamp - Double Sided

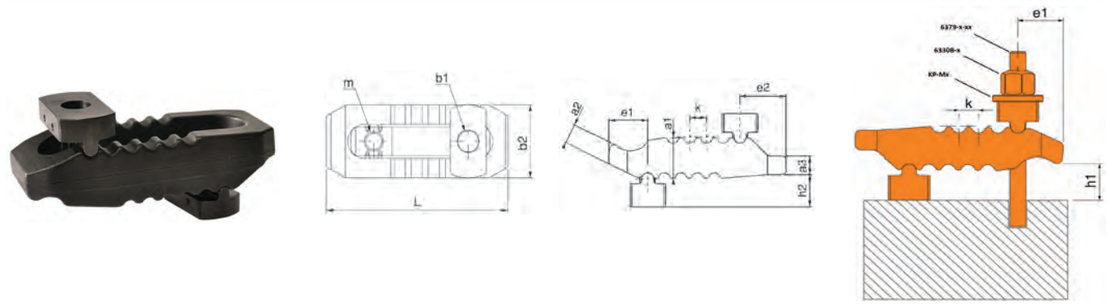

Part No.	b1	For Clamping Screw	M	a1	a2	a3	h2	k	b2	L	b3	h1	e1	e2	kgf (force)	Weight (g)	
C200-13	13	M10-M12	M12	27	12,5	12	21	11	44	115	30	0-55	25	30	3000	506	1
C200-17	17	M12-M16	M16	36	18	17	23	12	55	150	41	0-70	35	36	4000	1382	1
C200-21	21	M16-M20	M20	42	25	20	32,5	14	63	187	30	0-80	44	44	6000	2241	1
C200-25	25	M20-M24	M20	51	36,5	24	34	17	70	235	30	0-100	60	47	7500	3550	1

Materials:
Forged Steel, Hardened, Black Coating

Straight Clamp with Support Hole - Supplied without Adjusting Screw

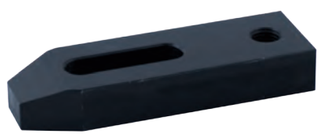

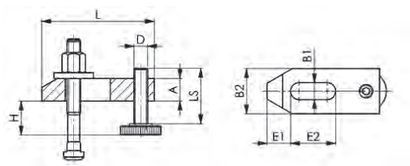

Part No.	Nut	DIN6314 B1xL	D	A	B2	E1	E2	
1330-11x80	10	11x80	M10	15	30	15	30	1
1330-14x100	12+14	14x100	M12	20	40	21	40	1
1330-14x125	12+14	14x125	M12	20	40	21	50	1
1330-18x125	16+18	18x125	M16	25	50	26	45	1
1330-18x160	16+18	18x160	M16	25	50	26	65	1
1330-22x160	20+22	22x160	M20	30	60	30	60	1
1330-22x200	20+22	22x200	M20	30	60	30	80	1
1330-26x160	24+26	26x160	M24	30	70	35	60	1
1330-26x200	24+26	26x200	M24	35	70	35	80	1
1330-26x250	24+26	26x250	M24	35	70	35	100	1
1330-26x315	24+26	26x315	M24	40	70	35	100	1
1330-33x315	30+33	33x315	M24	50	80	45	130	1
1330-43x400	36+43	43x400	M30	60	100	100	150	1

Adjusting Screw

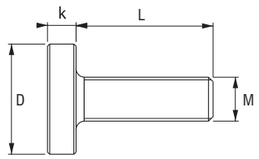

Part No.	M	L	D	K	
1490-10x42	M10	42	30	8	1
1490-12x50	M12	50	36	10	1
1490-12x95	M12	95	36	10	1
1490-16x62	M16	62	45	13	1
1490-16x97	M16	97	45	13	1
1490-16x117	M16	117	45	13	1
1490-20x62	M20	62	50	13	1
1490-20x97	M20	97	50	13	1
1490-20x117	M20	117	50	13	1
1490-24x81	M24	81	50	14	1
1490-24x116	M24	116	50	14	1
1490-30x180	M30	18	70	24	1

Material: Ck45 DIN.
Black Coating.

Hexagon Nut

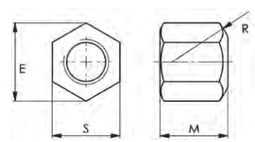

Part No.	Size	E	M	R	S	
6330B-6	M6	11,5	9	9	10	1
6330B-8	M8	15	12	12	13	1
6330B-10	M10	19,6	15	15	17	1
6330B-12	M12	21,9	18	17	19	1
6330B-14	M14	25,4	21	20	22	1
6330B-16	M16	27,7	24	22	24	1
6330B-18	M18	31,2	27	24	27	1
6330B-20	M20	34,6	30	27	30	1
6330B-22	M22	36,9	33	30	32	1
6330B-24	M24	41,5	36	32	36	1
6330B-30	M30	53,1	45	41	46	1
6330B-36	M36	63,5	54	50	55	1

Hexagon Nut DIN 6330B.
Material: Ck45 DIN.
Hardness: 30-32 HRC.
Black Coating.

Thick Washer

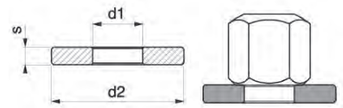

Part No.	d1	Thread to fit	d2	s	
KP-M6	6,4	M6	17	3	1
KP-M8	8,4	M8	23	4	1
KP-M10	10,5	M10	28	4	1
KP-M12	13	M12	35	5	1
KP-M14	15	M14	40	5	1
KP-M16	17	M16	45	6	1
KP-M18	19	M18	45	6	1
KP-M20	21	M20	50	6	1
KP-M22	23	M22	50	8	1
KP-M24	25	M24	60	8	1
KP-M30	31	M30	68	10	1

Ideal for Mould Clamping.

Straight Stud

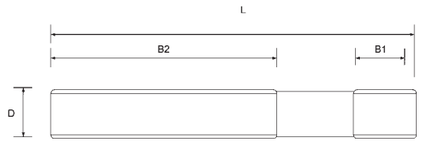

Part No.	D x L	B1	B2	
6379-8x40	M 8x 40	11	20	1
6379-8x63	M 8x 63	11	40	1
6379-8x80	M 8x 80	11	50	1
6379-8x100	M 8x100	11	63	1
6379-8x125	M 8x125	11	75	1
6379-8x160	M 8x160	11	100	1
6379-10x50	M10x 50	13	25	1
6379-10x80	M10x 80	13	50	1
6379-10x100	M10x100	13	75	1
6379-10x125	M10x125	13	75	1
6379-10x160	M10x160	13	100	1
6379-10x200	M10x200	13	125	1
6379-12x50	M12x 50	15	25	1
6379-12x63	M12x 63	15	32	1
6379-12x80	M12x 80	15	50	1
6379-12x100	M12x100	15	63	1
6379-12x125	M12x125	15	75	1
6379-12x160	M12x160	15	100	1
6379-12x200	M12x200	15	125	1
6379-14x63	M14x 63	17	32	1
6379-14x80	M14x80	17	50	1
6379-14x100	M14x100	17	63	1
6379-14x125	M14x125	17	75	1
6379-14x160	M14x160	17	100	1
6379-14x200	M14x200	17	125	1
6379-14x250	M14x250	17	160	1
6379-16x63	M16x 63	19	32	1
6379-16x80	M16x 80	19	50	1
6379-16x100	M16x100	19	63	1
6379-16x125	M16x125	19	75	1
6379-16x160	M16x160	19	100	1
6379-16x200	M16x200	19	125	1
6379-16x250	M16x250	19	160	1
6379-16x315	M16x315	19	180	1
6379-16x500	M16x500	19	315	1
6379-18x80	M18x 80	23	50	1
6379-18x125	M18x125	23	75	1
6379-18x160	M18x160	23	100	1
6379-18x200	M18x200	23	125	1
6379-18x250	M18x250	23	150	1

Part No.	D x L	B1	B2	
6379-18x315	M18x315	23	180	1
6379-20x80	M20x 80	27	32	1
6379-20x125	M20x125	27	70	1
6379-20x160	M20x160	27	100	1
6379-20x200	M20x200	27	125	1
6379-20x250	M20x250	27	160	1
6379-20x315	M20x315	27	200	1
6379-20x400	M20x400	27	250	1
6379-20x500	M20x500	27	315	1
6379-22x100	M22x100	31	45	1
6379-22x160	M22x160	31	100	1
6379-22x200	M22x200	31	125	1
6379-22x250	M22x250	31	160	1
6379-22x315	M22x315	31	180	1
6379-22x400	M22x400	31	250	1
6379-24x100	M24x100	35	45	1
6379-24x125	M24x125	35	70	1
6379-24x160	M24x160	35	100	1
6379-24x200	M24x200	35	125	1
6379-24x250	M24x250	35	160	1
6379-24x315	M24x315	35	200	1
6379-24x400	M24x400	35	250	1
6379-24x500	M24x500	35	315	1
6379-24x630	M24x630	35	315	1
6379-30x125	M30x125	43	56	1
6379-30x200	M30x200	43	125	1
6379-30x315	M30x315	43	200	1
6379-30x500	M30x500	43	315	1
6379-30x700	M30x700	43	400	1
6379-30x1000	M30x1000	43	400	1
6379-36x160	M36x160	51	80	1
6379-36x200	M36x200	51	125	1
6379-36x250	M36x250	51	160	1
6379-36x315	M36x315	51	200	1
6379-36x400	M36x400	51	250	1
6379-36x500	M36x500	51	315	1
6379-36x700	M36x700	51	400	1
6379-42x315	M42x315	59	200	1
6379-42x400	M42x400	59	250	1
6379-42x500	M42x500	59	315	1

Material: 41 Cr 4 DIN.
Quality 10.9.
Black Coating.

T-Nut

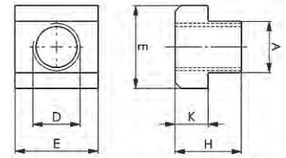

Part No.	D x Nut	A	E	H	K	
508-6x8	M 6x 8	7,7	13	10	6	1
508-8x10	M 8x10	9,7	15	12	6	1
508-8x12	M 8x12	11,7	18	14	7	1
508-10x12	M10x12	11,7	18	14	7	1
508-8x14	M 8x14	13,7	22	16	8	1
508-10x14	M10x14	13,7	22	16	8	1
508-12x14	M12x14	13,7	22	16	8	1
508-8x16	M 8x16	15,7	25	18	9	1
508-10x16	M10x16	15,7	25	18	9	1
508-12x16	M12x16	15,7	25	18	9	1
508-14x16	M14x16	15,7	25	18	9	1
508-8x18	M 8x18	17,7	28	20	10	1
508-10x18	M10x18	17,7	28	20	10	1
508-12x18	M12x18	17,7	28	20	10	1
508-14x18	M14x18	17,7	28	20	10	1
508-16x18	M16x18	17,7	28	20	10	1
508-16x20	M16x20	19,7	32	24	12	1
508-18x20	M18x20	19,7	32	24	12	1
508-16x22	M16x22	21,7	35	28	14	1
508-18x22	M18x22	21,7	35	28	14	1
508-20x22	M20x22	21,7	35	28	14	1
508-16x24	M16x24	23,7	40	32	16	1
508-20x24	M20x24	23,7	40	32	16	1
508-22x24	M22x24	23,7	40	32	16	1
508-16x28	M16x28	27,7	44	36	18	1
508-20x28	M20x28	27,7	44	36	18	1
508-22x28	M22x28	27,7	44	36	18	1
508-24x28	M24x28	27,7	44	36	18	1
508-24x36	M24x36	35,6	54	44	22	1
508-30x36	M30x36	35,6	54	44	22	1

T-Clamp DIN 508.
Material: Ck45 DIN.
Hardness: 30-32 HRC.
Black Coating.

11. Mould Handling

341 Lifting Points

342 Super Lifting Points

343 Eye Bolts and Shackles

345 Lifting Chain Slings

348 Mould Feet

349 Mould Splitting Tables

Lifting Points	**p. 341**	Lifting Chain Slings	p. 345
Super Lifting Points	p. 342	Mould Feet	p. 348
Eye Bolts and Shackles	p. 343	Mould Splitting Tables	p. 349

Now with NFC Inspection Chip

The SAP, SLP and KEP lifting points are equipped with NFC/RFID inspection Chip.

Access and update safety inspection procedures with your Smart-Phone. Scan the Chip on the lifting point and get all relevant data to ensure safety inspection compliance.

Free APP for iPhone and Android.

Swivel Anchor Point SAP

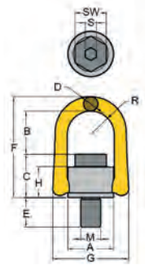

Part No.	W.L.L. (t)	Thread			Dimensions										Torque in Nm	Weight Kg.
		M(mm)	E (mm)	Pich(DIN13)	A	B	C	D	F	G	H	R	S	SW		
SAP-M8	0.5	M8	12	1.25	33	42	28	11	80	58	23	17	6	13	30	0.3
SAP-M10	0.7	M10	15	1.5	33	41	29	11	80	58	23	17	6	17	60	0.3
SAP-M12	1.0	M12	20	1.75	33	40	31	11	80	58	23	17	8	19	100	0.3
SAP-M16	2.0	M16	24	2	50	54	46	17	117	90	36	27	10	24	150	0.9
SAP-M20	3.0	M20	30	2.5	50	52	49	17	117	90	36	27	12	30	250	1.0
SAP-M24	5.0	M24	36	3	72	81	59	25	163	125	44	37	14	36	400	2.6
SAP-M27	5.6	M27	38	3	87	86	79	30	204	148	62	46	17	41	400	4.9
SAP-M30	7.8	M30	48	3.5	87	94	81	30	204	148	62	46	17	46	500	5.0
SAP-M36	12.5	M36	54	4	110	112	98	36	247	188	75	57	22	55	1000	9.6
SAP-M42	15.6	M42	63	4.5	110	101	108	36	247	188	83	57	24	65	1500	10.9
SAP-M48	20.0	M48	72	5	110	97	113	36	248	188	83	57	27	75	2000	11.6
SAP-M56	22.0	M56	84	5.5	123	116	121	36	274	202	91	64	27	85	2100	15.0
SAP-M64	22.5	M64	100	6	123	111	126	36	274	202	91	64	32	95	2200	16.3

- Rotates through 360° and pivots 180°, and simultaneously allows lifting from any direction.
- Manufactured from forged alloy steel, quenched and tempered.
- Manufactured and tested in accordance with EN1677-1.
- Load rated parts are 100% magnaflux crack detected.
- Individual forged parts and cap screw are traceable to Test Certification.
- Bolts are Metric thread (ASME / ANSI B18.3.1M), specification is alloy socket head screw per DIN EN ISO 4762.
- Proof tested to 2.5 times the WLL.
- Fatigue rated to 20,000 cycles at 1.5 times the WLL.
- All YOKE Lifting points meet or exceed all the requirements of ASME B30.26.
- Quick and simple assembly, just a tapped hole is required.

Lifting Points p. 341
Super Lifting Points p. 342
Eye Bolts and Shackles p. 343
Lifting Chain Slings p. 345
Mould Feet p. 348
Mould Splitting Tables p. 349

Swivel Lifting Point SLP

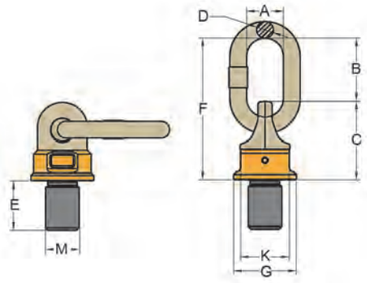

Part No.	Working Load Tonnes	Thread			Dimensions							Torque in Nm	Weight Kg.
		M(mm)	E (mm)	Pich(DIN13)	G	C	K	F	D	B	A		
SLP-M8	0.3	M8	12	1.25	36.5	48	34	101	13	53	35	10-40	0.3
SLP-M10	0.5	M10	18	1.5	36.5	48	34	101	13	53	35	10-40	0.4
SLP-M12	0.7	M12	18	1.75	36.5	48	34	101	13	53	35	15-40	0.4
SLP-M16	1.4	M16	20	2	36.5	48	34	101	13	53	35	45-130	0.44
SLP-M20	2.5	M20	30	2.5	52	68	46	127	16	59	35	100-170	1.0
SLP-M24	4.0	M24	30	3	57	75	50	148	19	73	40	190-280	1.5
SLP-M30	6.7	M30	35	3.5	70	95	65	163	19	68	40	230-400	2.4
SLP-M36	10.0	M36	50	4	81	106	75	201	22	95	50	270-600	3.8
SLP-M42	12.5	M42	50	4.5	81	106	75	201	22	95	50	270-700	3.9
SLP-M48	12.5	M48	72	5	81	106	75	201	22	95	50	270-700	4.4
SLP-M56	18	M56	78	5.5	104	127	95	256	32	129	70	350-900	8.1
SLP-M64	20	M64	110	6	104	127	95	256	32	129	70	350-900	9.3

- Pivots to 230°, rotates through 360° due to its unique ball bearing design. Design factor 4:1 in all directions.
- Manufactured from forged alloy steel, quenched and tempered.
- Manufactured and tested in accordance with EN1677-1.
- Certified by DGUV GS-OA-15-04.
- Load rated parts are 100% magnaflux crack detected.
- Individual forged parts and batch code links to Test Certificate sheet.
- Bolt are Metric thread (ASME / ANSI B18.3.1M).
- Proof tested to 2.5 times the WLL.
- Fatigue rated to 1.5 times the WLL.
- All YOKE Super points meet or exceed all the requirements of ASME B30.26.
- Easy to attach or dismantle due to the forged hexagon shaped body of the Super Point.
- Capable of rotating under load. Do not turn continuously in 90 degree direction at full load.

Lifting Points p. 341
Super Lifting Points p. 342
Eye Bolts and Shackles p. 343
Lifting Chain Slings p. 345
Mould Feet p. 348
Mould Splitting Tables p. 349

Key Eye Point KEP

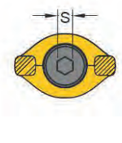

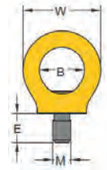

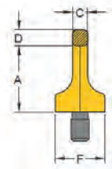

Part No.	W.L.L. (t) x (z)	Bolt Size	A	B	C	D	E	F	W	S	Mass Kg
KEP-M8	0.40 (1)	M8 X 1.5	36	25	8	9	12	25	44	6	0.1
KEP-M10	0.40 (1)	M10 x 1.50	36	25	8	9	15	25	44	6	0.1
KEP-M12	0.75 (2)	M12 x 1.75	45	30	10	11	18	33	52	8	0.2
KEP-M16	1.50 (4)	M16 x 2.00	52	35	14	13	24	35	61	10	0.3
KEP-M20	2.30 (6)	M20 x 2.50	60	40	16	15	30	44	70	12	0.6
KEP-M24	3.20 (8)	M24 x 3.00	72	48	19	18	36	52	84	14	1.0
KEP-M30	4.50 (12)	M30 x 3.50	90	60	24	22	45	60	105	17	1.8
KEP-M36	7.00 (16)	M36 x 4.00	109	72	29	27	54	76	126	22	3.2
KEP-M42	9.00 (24)	M42 x 4.50	123	82	34	32	63	88	147	24	5.0
KEP-M48	12.00 (32)	M48 x 5.00	144	94	38	37	72	104	168	27	7.6
KEP-M56	16.00 (34)	M56 x 5.50	147	102	40	43	84	124	178	27	9.2
KEP-M64	18.00 (36)	M64 X 6.00	147	102	40	43	95	130	178	27	10.0

- Rotates through 360° adjustable in the direction of the load.
- Manufactured from alloy steel, quenched and tempered.
- Manufactured and tested in accordance with EN1677-1.
- Load rated parts are 100% magnaflux crack detected.
- Individual forged parts and cap screw are traceable to Test Certification.
- Bolts are Metric thread (ASME / ANSI B18.3.1M),specification is alloy socket head screw per DIN EN ISO 4762.
- Proof tested to 2.5 times the WLL.
- Fatigue rated to 20,000 cycles at 1.5 times theWLL.
- All YOKE Lifting points meet or exceed all the requirements of ASME B30.26.
- Quick and simple assembly, just a tapped hole is required.

Lifting Eyebolts - Zinc Electroplated DIN 580

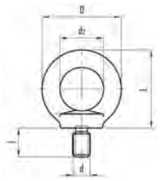

Part No.	d	l	D	d2	L	WLL	
EBGM8	M8	13	36	20	36	140kg	1
EBGM10	M10	17	45	25	45	230kg	1
EBGM12	M12	20	54	30	53	340kg	1
EBGM16	M16	27	63	35	62	700kg	1
EBGM20	M20	30	72	40	71	1200kg	1
EBGM24	M24	36	90	50	90	1800kg	1
EBGM30	M30	45	108	60	109	3600kg	1
EBGM36	M36	54	126	70	128	5100kg	1
EBGM42	M42	63	144	80	147	7000kg	1
EBGM48	M48	68	160	90	168	8600kg	1

Eyebolts/eyenuts to this standard are intended as permanent attachments on equipment.
Material: Steel C15.
Marking: According to standard, WLL, manufacturer C15, thread, CE.
Finish: Electro galvanized.
Standard: DIN 580.

Note: The lifting eyes shall be screwed tight against the surface. When two lifting eyes are used their mutual position shall result in the two eyes at the same level. Larger angle between the slings than 90° are not tolerated. Lifting eyes can not be assembled against a surface that differs essentially from a surface perpendicular to the direction of the lift.
Safety factor: 6:1.

Lifting Points p. 341
Super Lifting Points p. 342
Eye Bolts and Shackles p. 343
Lifting Chain Slings p. 345
Mould Feet p. 348
Mould Splitting Tables p. 349

Alloy Steel Bow Shackles - Galvanised

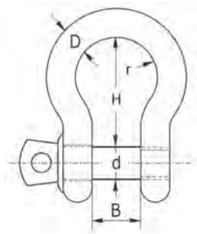

Part No.	Dim	B (mm)	d (mm)	H (mm)	r (mm)	WLL (kg)	
ASBSG11	3/8" x 7/16"'	17	11	37	26	1000	1
ASBSG13	7/16" x 1/2"	18	13	43	29	1500	1
ASBSG16	1/2" x 5/8"	21	16	48	33	2000	1
ASBSG19	5/8" x 3/4"	27	19	60	43	3250	1
ASBSG22	3/4" x 7/8"	32	22	71	51	4750	1
ASBSG25	7/8" x 1"	37	25	84	58	6500	1
ASBSG28	1" x 1 1/8"	43	28	95	68	8500	1
ASBSG32	1 1/8" x 1 1/4"	46	32	104	75	9500	1
ASBSG35	1 1/4" x 1 3/8"	52	36	119	82	12000	1

Mouldpro bow type shackle is a high quality shackle intended for use in demanding environments.
It is supplied with a screw pin for quick and easy opening.
Material: Forged alloy steel, supplied with alloy screw pin.
Marking: According to standard, CE-marked, WLL, size and grade
Temperature range: -20°C up to +200°C.
Finish: All parts hot dip galvanized. Bolt additional powder painted.
Standard: EN 13889.
Safety factor: 6:1.
Grade: 6.

Lifting Points p. 341
Super Lifting Points p. 342
Eye Bolts and Shackles p. 343
Lifting Chain Slings p. 345
Mould Feet p. 348
Mould Splitting Tables p. 349

Lifting Chain Slings

Features
Mouldpro offers best solutions which can adjust the length of Chain Sling serving for unsymmetric lengths with convenience and functionality.
Also with following features.

Light weight but heavy duty system, extreme wear resistance and longer life than traditional components.

- Cost effective compared to conventional slings using multiple components.
- Product designed according to EN1677 and PAS 1061, tested according to GS-OA-15-05.
- Each component is Proof Load tested at 2.5 times the WLL with certification for each sling.
- Each component is Fatigue Rated to 20,000 cycles at 1.5 times the WLL.
- Each component is marked with batch number that links to the test certificate with full traceability to raw material.
- Fully integrated shortening clutch and master link.
- No reduction in WLL when shortening chain.
- Replacement parts available worldwide.
- Equipped with NFC/RFID Inspection Chip

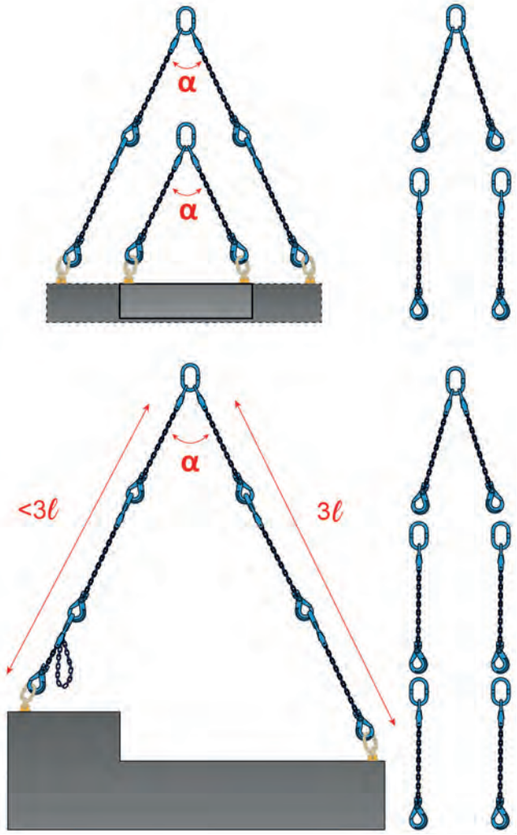

Lifting Points	p. 341	**Lifting Chain Slings**	**p. 345**
Super Lifting Points	p. 342	Mould Feet	p. 348
Eye Bolts and Shackles	p. 343	Mould Splitting Tables	p. 349

Sling with 1 Chain

Part No.	WLL Tonnes*	Dimensions (mm)				L (M)	N.W. KG
		Chain Size	A	B	P		
LCS-1-08	2.5	8	160	95	27	3	10.8
LCS-1-10	4.0	10	170	105	34	3	18.0

* Design factor 4:1 for components in accordance with PAS1061.

Sling with 2 Chains

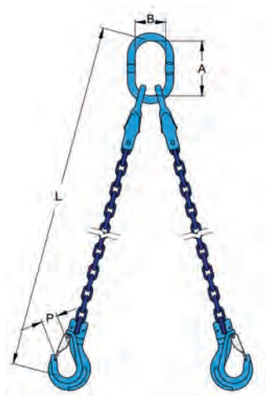

Part No.	Working Load Tonnes		Dimensions (mm)				L (M)	N.W. KG
	β 0-45° α 0-90°	β 45-60° α 90-120°	Chain Size	A	B	P		
LCS-2-08	3.5	2.5	8	160	95	27	3	10.8
LCS-2-10	5.6	4.0	10	170	105	34	3	18.0

* Design factor 4:1 for components in accordance with PAS1061.

Mould Handling | Lifting Chain Slings

Lifting Points	p. 341	**Lifting Chain Slings**	**p. 345**
Super Lifting Points	p. 342	Mould Feet	p. 348
Eye Bolts and Shackles	p. 343	Mould Splitting Tables	p. 349

Sling with 4 Chains

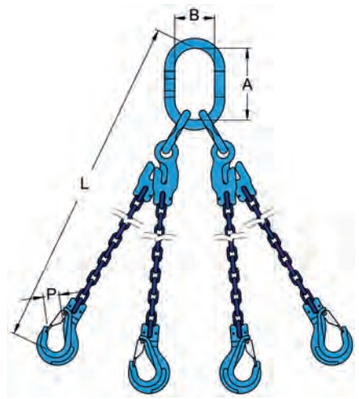

Part No.	Working Load Tonnes		Dimensions (mm)				L (M)	N.W. KG
	β 0-45° α 0-90°	β 45-60° α 90-120°	Chain Size	A	B	P		
LCS-4-08	5.3	3.8	8	160	95	27	3	21.5
LCS-4-10	8.4	6.0	10	170	105	34	3	35.6

* Design factor 4:1 for components in accordance with PAS1061.

Mould Handling

11

Lifting Points	p. 341	Lifting Chain Slings	p. 345
Super Lifting Points	p. 342	**Mould Feet**	**p. 348**
Eye Bolts and Shackles	p. 343	Mould Splitting Tables	p. 349

Mould Feet

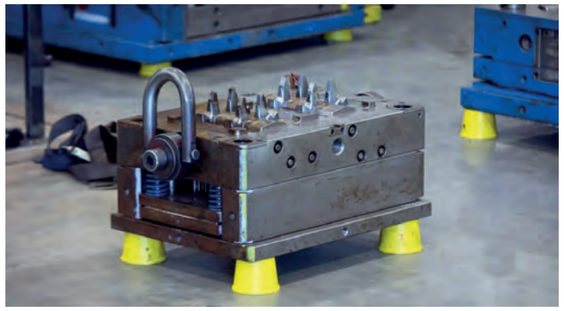

Part No.	Diameter	Height	SWL (KG)	
RHF2	104	50	3000	1
RHF3	104	75	3000	1
RHF4	104	100	3000	1
RHF5	140	125	7000	1

Mould Feet are specially designed, patent-pending support pads that stick to a wide variety of items and keep them elevated. Mould Feet can support massive weight loads and have magnetic inserts moulded directly into the part. These magnets allow the Mould Feet to travel with the item you are supporting. It makes transporting and working on heavy metal items much faster and easier.

The top of each Mould Foot has a rare-earth magnet moulded directly into the part. It provides strong holding power on ferrous metal surfaces. The bottom of each Rhino Foot has a steel insert. This allows Mould Feet to be stacked together for storage purposes. Mould Feet have a patent-pending, unique webbed geometry that supports incredible weight loads.

Improve your 5-S efforts by improving cleanliness and organisation of your Mouldshop and eliminate the trip hazards and free up floor space by removing the large footprint of wood / pallets.

- Integrated Magnet
- Available in 4 sizes
- SWL up to 7000 kg

Lifting Points	p. 341	Lifting Chain Slings	p. 345
Super Lifting Points	p. 342	Mould Feet	p. 348
Eye Bolts and Shackles	p. 343	**Mould Splitting Tables**	**p. 349**

MOULD SPLITTING TABLES

Designed for easy handling of moulding tools, these tables will simplify your maintenance tasks.

Moulds can be opened and closed within seconds, allowing quick access to different parts.
With a wide range of customisable options, these tables can be adapted to suit any type of mould, ensuring both efficiency and safety.

These tables streamline the process of opening, closing and accessing mould components for maintenance, repairs, cleaning or assembly, making it an essential tool for manufacturing and fitting operations.

01. SAFETY

Staff safety
Equipment protection
Reduction of work load

02. VARIOUS SIZES

1500 kg
2000 kg
3000 kg
6000 kg

03. PRODUCTIVITY

Time-saving
Ease of implementation
Space-saving

Lifting Points p. 341
Super Lifting Points p. 342
Eye Bolts and Shackles p. 343
Lifting Chain Slings p. 345
Mould Feet p. 348
Mould Splitting Tables p. 349

Standard Mould Table - 1,5 to 3T

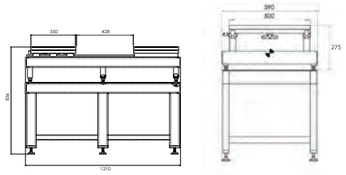

References	Maxi load	Length	Width	Plates dimensions	Working high with extension table	Opening stroke
OPTIM1T	1500 kg	1210 mm	590 mm	500 x 350 mm	830 mm	428 mm
OPTIM2T	2000 kg	1210 mm	590 mm	500 x 350 mm	830 mm	428 mm
OPTIM3T	3000 kg	1210 mm	590 mm	500 x 350 mm	830 mm	428 mm

Mould table with smooth plates for magnetic brackets - 1,5 to 3T

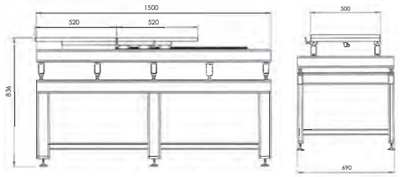

References	Maxi load	Length	Width	Plates dimensions	Working high with extension table	Opening stroke
OPTIM1TXL	1500 kg	1500 mm	690 mm	500 x 520 mm	830 mm	428 mm
OPTIM2TXL	2000 kg	1500 mm	690 mm	500 x 520 mm	830 mm	428 mm
OPTIM3TXL	3000 kg	1500 mm	690 mm	500 x 520 mm	830 mm	428 mm

Mould table with T-slots plates for mechanical brackets - 1,5 to 3T

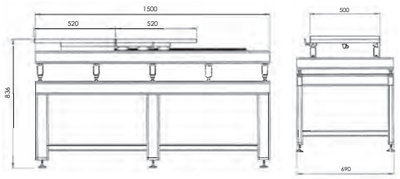

References	Maxi load	Length	Width	Plates dimensions	Working high with extension table	Opening stroke
OPTIM1TEQ	1500 kg	1500 mm	690 mm	500 x 520 mm	840 mm	428 mm
OPTIM2TEQ	2000 kg	1500 mm	690 mm	500 x 520 mm	840 mm	428 mm
OPTIM3TEQ	3000 kg	1500 mm	690 mm	500 x 520 mm	840 mm	428 mm

Mould table with M8 threaded plates for forged brackets - 1,5 to 3T

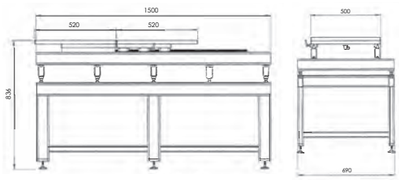

References	Maxi load	Length	Width	Plates dimensions	Working high with extension table	Opening stroke
OPTIM1TEQ02	1500 kg	1500 mm	690 mm	500 x 520 mm	830 mm	428 mm
OPTIM2TEQ02	2000 kg	1500 mm	690 mm	500 x 520 mm	830 mm	428 mm
OPTIM3TEQ02	3000 kg	1500 mm	690 mm	500 x 520 mm	830 mm	428 mm

Mould Handling | Mould Splitting Tables

Lifting Points p. 341
Super Lifting Points p. 342
Eye Bolts and Shackles p. 343
Lifting Chain Slings p. 345
Mould Feet p. 348
Mould Splitting Tables p. 349

Standard mould table - 6T

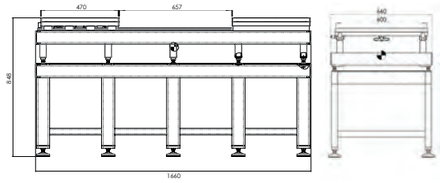

References	Maxi load	Length	Width	Plates dimensions	Working high with extension table	Opening stroke
OPTIM16T	6000 kg	1660 mm	660 mm	600 x 470 mm	850 mm	657 mm

Mould table with smooth plates for magnetic brackets - 6T

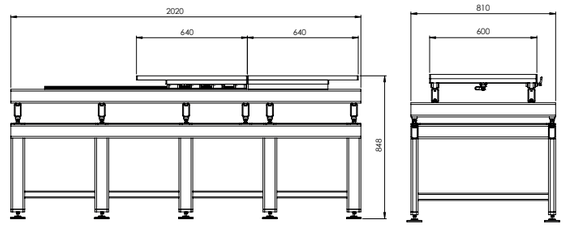

References	Maxi load	Length	Width	Plates dimensions	Working high with extension table	Opening stroke
OPTIM6TXL	6000 kg	2020 mm	810 mm	600 x 640 mm	850 mm	657 mm

Mould table with T-slots plates for mechanical brackets - 6T

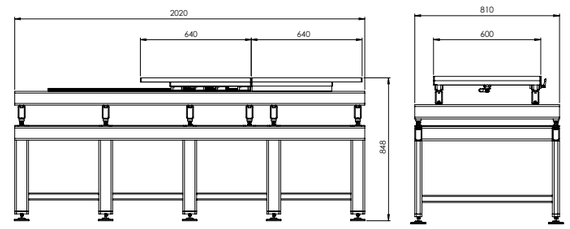

References	Maxi load	Length	Width	Plates dimensions	Working high with extension table	Opening stroke
OPTIM6TEQ	6000 kg	2020 mm	810 mm	600 x 640mm	850 mm	657 mm

Mould table with M8 threaded plates for forged brackets - 1,5 to 6T

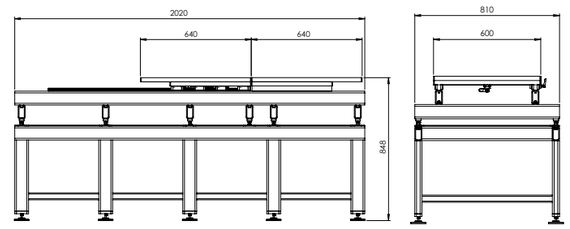

References	Maxi load	Length	Width	Plates dimensions	Working high with extension table	Opening stroke
OPTIM6TEQ02	6000 kg	2020 mm	810 mm	600 x 640 mm	850 mm	657 mm

Lifting Points p. 341
Super Lifting Points p. 342
Eye Bolts and Shackles p. 343
Lifting Chain Slings p. 345
Mould Feet p. 348
Mould Splitting Tables p. 349

OPTIONS

Drawer Module

References	Compatibility
OPTIMTIROIR	OPTIM1T-2T-3T
OPTIMTIROIRXL	OPTIM1T-2T-3TXL-EQ-EQ02
OPTIMTIROIR6T	OPTIM6T
OPTIMTIROIR6TXL	OPTIM6TXL-EQ-EQ02

Drawer blocks for storage, with integrated lock.

Manual Clamping

References	Description
OPTIMBLOC	Manual clamping pour table OPTIM

Positioning of the movable carriage with locking on the rails.

Positioning Stop

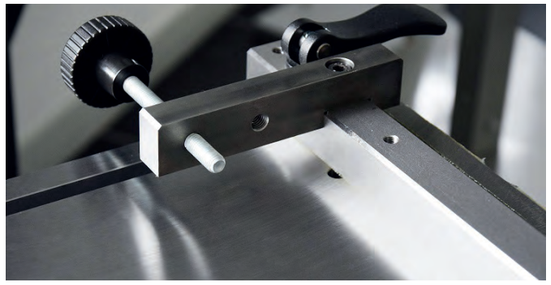

References	Compatibility
OPTIMBUT	OPTIM1T-2T-3TEQ
OPTIMBUT6T	OPTIM6TEQ

Adjustment of the position of the mould on the table.

Clamping Kit

References	Compatibility
OPTIMBRIDAGEQ02	OPTIM1T-2T-3T-6TEQ02
OPTIMBRIDAGEQ	OPTIM1T-2T-3T-6TEQ

Clamping kit with 2 clamps and 2 quick-release clamps.

Metal Blowgun Kit

References	Compatibility
KITAIR	Metal blowgun 1 inlet fitting type BBE06 2 outlet fittings type BBE06

Metal blowgun for easy cleaning.

Mould Handling | Mould Splitting Tables

Lifting Points p. 341
Super Lifting Points p. 342
Eye Bolts and Shackles p. 343
Lifting Chain Slings p. 345
Mould Feet p. 348
Mould Splitting Tables p. 349

BRACKETS

Mechanical Bracket

References	Description
OPTIMEQ	Standard table bracket OPTIM1T-2T-3TEQ OPTIMBRIDAGEQ included
OPTIMEQ6T	Standard table bracket OPTIM6TEQ OPTIMBRIDAGEQ included

- Mechanical mould holding system
- Parallelism between bracket and mould

Forged Bracket

References	Compatibility
OPTIMEQ02	OPTIM1T-2T-3TEQ02 (OPTIMBRIDAGEQ02 included)
OPTIMEQ6T02	OPTIM6TEQ02 (OPTIMBRIDAGEQ02 included)

- Lightweight
- Easy to assemble
- Economical

Magnetic Bracket

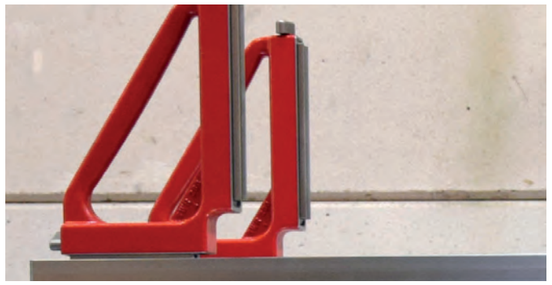

References	Compatibility
BWR260/90S	Magnetical bracket 285x195x45mm

Magnetical Brackets
- Mould magnetical holding system
- Allow a free positioning on the plates
- Magnetic activation/deactivation switch
- Not appropriate for tools equiped by isolation plates

12. Mould Components

355 Ejector Pins

360 Sleeve Ejectors

361 Flat Ejectors

362 Core Pins

363 Dowel Pins

365 Angle Guide Pins

366 Socket Head Cap Screws

367 Shoulder Screws

368 Spring Plungers

369 Iso Springs

372 Mould Cycle Counter

373 Round Counters

Ejector Pins	p. 355	Dowel Pins	p. 363	Spring Plungers	p. 368
Sleeve Ejectors	p. 360	Angle Guide Pins	p. 365	Iso Springs	p. 369
Flat Ejectors	p. 361	Socket Head Cap Screws	p. 366	Mould Cycle Counter	p. 372
Core Pins	p. 362	Shoulder Screws	p. 367	Round Counters	p. 373

Ejector Pins, DIN 1530, Type AH - Hardened

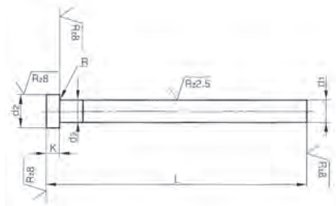

					L 0/+2						
d1 g6	d2 0 -0,2	k 0 -0,05	R +0,2 0	d3	100	125	160	200	250	315	400
1,5	3	1,5	0,2	d1 + 0,03	•	•	•	•			
1,6	3	1,5	0,2	d1 + 0,03	•	•	•	•			
2,0	4	2	0,2	d1 + 0,03	•	•	•	•	•	•	
2,2	4	2	0,2	d1 + 0,03	•	•	•	•	•	•	
2,5	5	2	0,3	d1 + 0,03	•	•	•	•	•	•	
2,7	5	2	0,3	d1 + 0,03	•	•	•	•	•	•	
3,0	6	3	0,3	d1 + 0,03	•	•	•	•	•	•	•
3,2	6	3	0,3	d1 + 0,03	•	•	•	•	•	•	
3,5	7	3	0,3	d1 + 0,03	•	•	•	•	•	•	
3,7	7	3	0,3	d1 + 0,03	•	•	•	•	•	•	
4,0	8	3	0,3	d1 + 0,03	•	•	•	•	•	•	•
4,2	8	3	0,3	d1 + 0,03	•	•	•	•	•	•	•
4,5	8	3	0,3	d1 + 0,03	•	•	•	•	•	•	•
5,0	10	3	0,3	d1 + 0,03	•	•	•	•	•	•	•
5,2	10	3	0,3	d1 + 0,03	•	•	•	•	•	•	•
5,5	10	3	0,3	d1 + 0,03	•	•	•	•	•	•	•
6,0	12	5	0,5	d1 + 0,03	•	•	•	•	•	•	•
6,2	12	5	0,5	d1 + 0,03	•	•	•	•	•	•	•
6,5	12	5	0,5	d1 + 0,03	•	•	•	•	•	•	•
7,0	12	5	0,5	d1 + 0,03	•	•	•	•	•	•	•
8,0	14	5	0,5	d1 + 0,03	•	•	•	•	•	•	•
8,2	14	5	0,5	d1 + 0,04	•	•	•	•	•	•	•
8,5	14	5	0,5	d1 + 0,04	•	•	•	•	•	•	•
9,0	14	5	0,5	d1 + 0,04	•	•	•	•	•	•	•
10,0	14	5	0,5	d1 + 0,04	•	•	•	•	•	•	•
10,2	14	5	0,5	d1 + 0,04	•	•	•	•	•	•	•
10,5	14	5	0,5	d1 + 0,04	•	•	•	•	•	•	•
11,0	14	5	0,5	d1 + 0,04	•	•	•	•	•	•	•
12,0	20	7	0,8	d1 + 0,04	•	•	•	•	•	•	•
12,2	20	7	0,8	d1 + 0,04	•	•	•	•	•	•	•
12,5	20	7	0,8	d1 + 0,04	•	•	•	•	•	•	•
14,0	22	7	0,8	d1 + 0,04	•	•	•	•	•	•	•
16,0	22	7	0,8	d1 + 0,04	•	•	•	•	•	•	•
18,0	24	7	0,8	d1 + 0,07	•	•	•	•	•	•	•
20,0	26	8	1,0	d1 + 0,07	•	•	•	•	•	•	•

Surface: Hardened and Polished.
Material: 1.2516.
Hardness: 60 ± 2 HRC. Head 45 ± 5 HRC.

Order example
UDSAH+d1+L ex. UDSAH4160 (4x160 mm).

Ejector Pins	p. 355	Dowel Pins	p. 363	Spring Plungers	p. 368
Sleeve Ejectors	p. 360	Angle Guide Pins	p. 365	Iso Springs	p. 369
Flat Ejectors	p. 361	Socket Head Cap Screws	p. 366	Mould Cycle Counter	p. 372
Core Pins	p. 362	Shoulder Screws	p. 367	Round Counters	p. 373

Ejector Pins, DIN 6751, Type AB - Nitrided

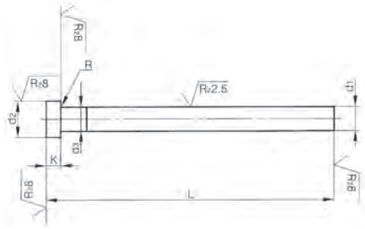

					L 0/+2										
d1 g6	d2 -0,2	k -0,05	R	d3	100	125	160	200	250	315	400	500	630	800	1000
1,5	3	1,5	0,2	d_1 + 0,03	•	•	•	•							
2,0	4	2	0,2	d_1 + 0,03	•	•	•	•	•						
2,2	4	2	0,3	d_1 + 0,03	•	•	•	•	•						
2,5	5	3	0,3	d_1 + 0,03	•	•	•	•	•	•					
3,0	6	3	0,3	d_1 + 0,03	•	•	•	•	•	•	•	•			
3,2	6	3	0,3	d_1 + 0,03	•	•	•	•	•	•	•				
3,5	7	3	0,3	d_1 + 0,03	•	•	•	•	•	•	•	•			
3,7	7	3	0,3	d_1 + 0,03	•	•	•	•	•	•					
4,0	8	3	0,3	d_1 + 0,03	•	•	•	•	•	•	•	•			
4,2	8	3	0,3	d_1 + 0,03	•	•	•	•	•	•	•				
4,5	8	3	0,3	d_1 + 0,03	•	•	•	•	•	•	•				
5,0	10	3	0,3	d_1 + 0,03	•	•	•	•	•	•	•	•	•	•	
5,2	10	3	0,3	d_1 + 0,03	•	•	•	•	•	•	•	•			
6,0	12	5	0,5	d_1 + 0,03	•	•	•	•	•	•	•	•	•	•	
6,2	12	5	0,5	d_1 + 0,03	•	•	•	•	•	•	•	•			
8,0	14	5	0,5	d_1 + 0,03	•	•	•	•	•	•	•	•	•	•	•
8,2	14	5	0,5	d_1 + 0,04	•	•	•	•	•	•	•	•			
10,0	16	5	0,5	d_1 + 0,04	•	•	•	•	•	•	•	•	•	•	•
10,2	16	5	0,5	d_1 + 0,04	•	•	•	•	•	•	•	•			
11,0	16	5	0,5	d_1 + 0,04	•	•	•	•	•	•	•	•			
12,0	20	7	0,8	d_1 + 0,04	•	•	•	•	•	•	•	•	•	•	•
12,2	20	7	0,8	d_1 + 0,04	•	•	•	•	•	•	•	•			
12,5	20	7	0,8	d_1 + 0,04	•	•	•	•	•	•	•	•	•		
14,0	22	7	0,8	d_1 + 0,04	•	•	•	•	•	•	•	•	•	•	•
16,0	22	7	0,8	d_1 + 0,04	•	•	•	•	•	•	•	•	•	•	•
20,0	26	8	1	d_1 + 0,1		•	•	•	•	•	•	•	•	•	•
25,0	32	10	1	d_1 + 0,1			•	•	•	•	•	•	•	•	•
32,0	40	10	1	d_1 + 0,1				•	•	•	•	•	•	•	•

Surface: Nitrided and Polished.
Material: 1.2344.
Hardness: 65 ± 2 HRC. Head 45 ± 5 HRC.

Order example
UDSAB+d1+L ex. UDSAB4160 (4x160 mm).

Mould Components / Ejector Pins

Ejector Pins	p. 355	Dowel Pins	p. 363	Spring Plungers	p. 368
Sleeve Ejectors	p. 360	Angle Guide Pins	p. 365	Iso Springs	p. 369
Flat Ejectors	p. 361	Socket Head Cap Screws	p. 366	Mould Cycle Counter	p. 372
Core Pins	p. 362	Shoulder Screws	p. 367	Round Counters	p. 373

Ejector Pins, DIN 1530, Type AN - Nitrided

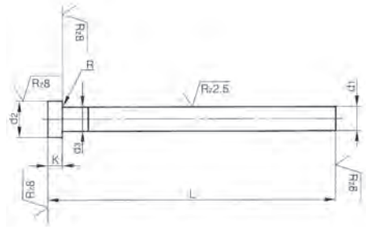

					L 0/+2										
d1 g6	d2 -0,2	k -0,05	R	d3	100	125	160	200	250	315	400	500	630	800	1000
1,5	3	1,5	0,2	d_1 + 0,03	•	•	•	•							
2,0	4	2	0,2	d_1 + 0,03	•	•	•	•	•						
2,2	4	2	0,3	d_1 + 0,03	•	•	•	•							
2,5	5	3	0,3	d_1 + 0,03	•	•	•	•	•	•					
3,0	6	3	0,3	d_1 + 0,03	•	•	•	•	•	•	•	•			
3,2	6	3	0,3	d_1 + 0,03	•	•	•	•	•	•	•				
3,5	7	3	0,3	d_1 + 0,03	•	•	•	•	•	•	•				
3,7	7	3	0,3	d_1 + 0,03	•	•	•	•	•	•					
4,0	8	3	0,3	d_1 + 0,03	•	•	•	•	•	•	•	•			
4,2	8	3	0,3	d_1 + 0,03	•	•	•	•	•	•	•				
4,5	8	3	0,3	d_1 + 0,03	•	•	•	•	•	•	•				
5,0	10	3	0,3	d_1 + 0,03	•	•	•	•	•	•	•	•	•	•	
5,2	10	3	0,3	d_1 + 0,03	•	•	•	•	•	•	•	•			
6,0	12	5	0,5	d_1 + 0,03	•	•	•	•	•	•	•	•	•	•	
6,2	12	5	0,5	d_1 + 0,03	•	•	•	•	•	•	•	•			
8,0	14	5	0,5	d_1 + 0,03	•	•	•	•	•	•	•	•	•	•	•
8,2	14	5	0,5	d_1 + 0,04	•	•	•	•	•	•	•	•			
10,0	16	5	0,5	d_1 + 0,04	•	•	•	•	•	•	•	•	•	•	•
10,2	16	5	0,5	d_1 + 0,04	•	•	•	•	•	•	•	•			
11,0	16	5	0,5	d_1 + 0,04	•	•	•	•	•	•	•	•			
12,0	20	7	0,8	d_1 + 0,04	•	•	•	•	•	•	•	•	•	•	•
12,2	20	7	0,8	d_1 + 0,04	•	•	•	•	•	•	•	•			
12,5	20	7	0,8	d_1 + 0,04	•	•	•	•	•	•	•	•	•		
14,0	22	7	0,8	d_1 + 0,04	•	•	•	•	•	•	•	•	•	•	•
16,0	22	7	0,8	d_1 + 0,04	•	•	•	•	•	•	•	•	•	•	•
20,0	26	8	1	d_1 + 0,1		•	•	•	•	•	•	•	•	•	•
25,0	32	10	1	d_1 + 0,1			•	•	•	•	•	•	•	•	•
32,0	40	10	1	d_1 + 0,1			•	•	•	•	•	•	•	•	•

Surface: Bath Nitrided.
Material: 1.2344.
Hardness: 65 ± 2 HRC. Head 45 ± 5 HRC.

Order example
UDSAN+d1+L ex. UDSAN4160 (4x160 mm).

Ejector Pins	p. 355	Dowel Pins	p. 363	Spring Plungers	p. 368
Sleeve Ejectors	**p. 360**	Angle Guide Pins	p. 365	Iso Springs	p. 369
Flat Ejectors	p. 361	Socket Head Cap Screws	p. 366	Mould Cycle Counter	p. 372
Core Pins	p. 362	Shoulder Screws	p. 367	Round Counters	p. 373

Ejector Pins, DIN 1530, Type D - Hardened

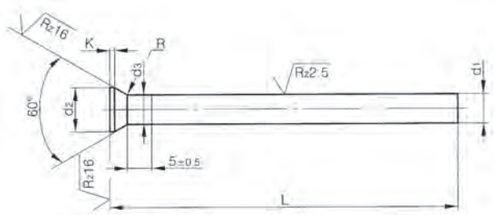

					L 0/+2				
d1 g6	d2-0,2	k -0,05	R 0/+0,2	d3	100	125	160	200	250
1	1,8	0,3	0,3	d_1 + 0,03	•	•	•	•	•
1,2	2	0,3	0,3	d_1 + 0,03	•	•	•	•	•
1,5	2,2	0,3	0,3	d_1 + 0,03	•	•	•	•	•
2	3	0,3	0,3	d_1 + 0,03	•	•	•	•	•
2,2	3,2	0,3	0,3	d_1 + 0,03	•	•	•	•	•
2,5	3,5	0,3	0,3	d_1 + 0,03	•	•	•	•	•
3	4,5	0,3	0,3	d_1 + 0,03	•	•	•	•	•
3,5	5	0,3	0,3	d_1 + 0,03	•	•	•	•	•
4	5,5	0,3	0,3	d_1 + 0,03	•	•	•	•	•
4,5	6	0,3	0,3	d_1 + 0,03	•	•	•	•	•
5	6,5	0,3	0,3	d_1 + 0,03	•	•	•	•	•
5,5	7	0,3	0,5	d_1 + 0,03	•	•	•	•	•
6	8	0,5	0,5	d_1 + 0,03	•	•	•	•	•
6,5	9	0,5	0,5	d_1 + 0,03	•	•	•	•	•
7	9	0,5	0,5	d_1 + 0,03	•	•	•	•	•
7,5	10	0,5	0,5	d_1 + 0,03	•	•	•	•	•
8	10	0,5	0,5	d_1 + 0,03	•	•	•	•	•
10	12	0,5	0,5	d_1 + 0,03	•	•	•	•	•
12	14	0,5	0,5	d_1 + 0,03	•	•	•	•	•
14	16	0,8	0,8	d_1 + 0,04	•	•	•	•	•
16	18	0,8	0,8	d_1 + 0,04	•	•	•	•	•

Surface: Hardened and Polished.
Material: 1.2516.
Hardness: 60 ± 2 HRC. Head 45 ± 5 HRC.

Order example
UDSD+d1+L ex. UDSD4160 (4x160 mm).

Mould Components / Ejector Pins

Ejector Pins	**p. 355**	Dowel Pins	p. 363	Spring Plungers	p. 368
Sleeve Ejectors	p. 360	Angle Guide Pins	p. 365	Iso Springs	p. 369
Flat Ejectors	p. 361	Socket Head Cap Screws	p. 366	Mould Cycle Counter	p. 372
Core Pins	p. 362	Shoulder Screws	p. 367	Round Counters	p. 373

Ejector Pins, DIN 1530, Type CH - Hardened

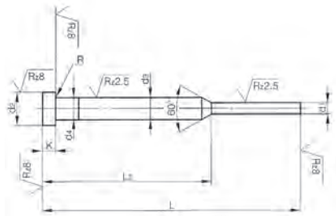

					L1	100	125	160	200
d1 g6	d2 0-0,2	d3 g6	k 0-0,05	R -0,05	L2	50	50	75	75
0,8	4	2	2	0,2		•	•	•	•
0,9	4	2	2	0,2		•	•	•	•
1,0	4	2	2	0,2		•	•	•	•
1,1	4	2	2	0,2		•	•	•	
1,2	4	2	2	0,2		•	•	•	•
1,3	4	2	2	0,2		•	•	•	•
1,4	4	2	2	0,2		•	•	•	•
1,5	6	3	3	0,3		•	•	•	•
1,6	6	3	3	0,3		•	•	•	•
1,7	6	3	3	0,3		•	•	•	•
1,8	6	3	3	0,3		•	•	•	•
1,9	6	3	3	0,3		•	•	•	•
2,0	6	3	3	0,3		•	•	•	•
2,1	6	3	3	0,3		•	•	•	•
2,2	6	3	3	0,3		•	•	•	•
2,3	6	3	3	0,3		•	•	•	•
2,4	6	3	3	0,3		•	•	•	•
2,5	6	3	3	0,3		•	•	•	•

Surface: Hardened and Polished.
Material: 1.2516.
Hardness: 60 ± 2 HRC. Head 45 ± 5 HRC.

Order example
UDSCH+d1+L ex. UDSCH2160 (2x160 mm).

Ejector Pins	p. 355	Dowel Pins	p. 363	Spring Plungers	p. 368
Sleeve Ejectors	**p. 360**	Angle Guide Pins	p. 365	Iso Springs	p. 369
Flat Ejectors	p. 361	Socket Head Cap Screws	p. 366	Mould Cycle Counter	p. 372
Core Pins	p. 362	Shoulder Screws	p. 367	Round Counters	p. 373

Sleeve Ejectors - Hardened

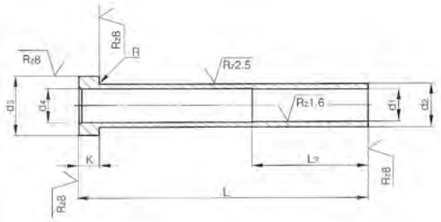

							L -0/+2							
d2 g6	d1 H5	d4	d3 0 -0,2	k 0 -0,05	R +0,2 0	l2 +2 0	75	100	125	150	175	200	225	250
3	1,5	2	6	3	0,3	35	•	•	•	•				
3	1,6	2	6	3	0,3	35	•	•	•	•				
4	2	2,4	8	3	0,3	35	•	•	•	•	•	•	•	•
4	2,2	2,6	8	3	0,3	35	•	•	•	•	•	•	•	•
5	2,5	2,9	10	3	0,3	35	•	•	•	•	•	•	•	•
5	2,7	3	10	3	0,3	35	•	•	•	•	•	•	•	•
5	3	3,4	10	3	0,3	46	•	•	•	•	•	•	•	•
5	3,2	3,6	10	3	0,3	46	•	•	•	•	•	•	•	•
6	3,5	3,9	12	5	0,5	46	•	•	•	•	•	•	•	•
6	3,7	4	12	5	0,5	46	•	•	•	•	•	•	•	•
6	4	4,4	12	5	0,5	46	•	•	•	•	•	•	•	•
8	4,2	4,6	14	5	0,5	46	•	•	•	•	•	•	•	•
8	5	5,4	14	5	0,5	46	•	•	•	•	•	•	•	•
8	5,2	5,6	14	5	0,5	46	•	•	•	•	•	•	•	•
10	6	6,4	16	5	0,5	46	•	•	•	•	•	•	•	•
10	6,2	6,6	16	5	0,5	46	•	•	•	•	•	•	•	•
12	8	8,4	20	7	0,7	46	•	•	•	•	•	•	•	•
12	8,2	8,6	20	7	0,7	46	•	•	•	•	•	•	•	•
14	10	10,4	22	7	0,7	46	•	•	•	•	•	•	•	•
14	10,5	11	22	7	0,7	46	•	•	•	•	•	•	•	•
16	12	12,4	22	7	0,7	46	•	•	•	•	•	•	•	•
16	12,5	13	22	7	0,7	46	•	•	•	•	•	•	•	•

Surface: Hardened and Polished.
Material: 1.2516.
Hardness: 60 ± 2 HRC. Head 45 ± 5 HRC.

Order example
RUD(+d2+d1+L)H ex. RUD64125H (6x4x125mm).

Ejector Pins	p. 355	Dowel Pins	p. 363	Spring Plungers	p. 368
Sleeve Ejectors	p. 360	Angle Guide Pins	p. 365	Iso Springs	p. 369
Flat Ejectors	**p. 361**	Socket Head Cap Screws	p. 366	Mould Cycle Counter	p. 372
Core Pins	p. 362	Shoulder Screws	p. 367	Round Counters	p. 373

Flat Ejectors - Hardened

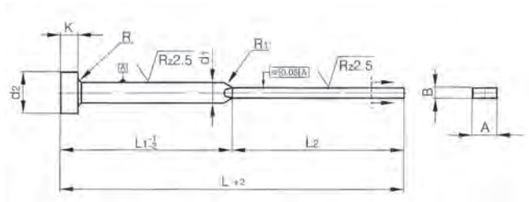

					L	100	125	160	200
					L1	50	65	80	100
d1 g6	A +0 -0,015	B +0 -0,015	d2 +0 -0,2	K -0,05	L2	50	60	80	100
4	3,5	1	8	3		•	•		
4,2	3,8	1	8	3		•	•	•	
4,2	3,8	1,2	8	3		•	•	•	
6	5,5	1,2	12	5		•	•	•	•
6	5,5	1,5	12	5		•	•	•	•
6	5,5	2	12	5		•	•	•	•
8	7,5	1,2	14	5		•	•	•	•
8	7,5	1,5	14	5		•	•	•	•
8	7,5	2	14	5		•	•	•	•

Surface: Hardened and Polished/Grinded.
Material: 1.2516.
Hardness: Skaft 60 ± 2 HRC. Head 45 ± 5 HRC.

Order example
FLU(+B+A+L)H ex. FLU25,5125H (2x5,5x125mm).

Ejector Pins	p. 355	Dowel Pins	p. 363	Spring Plungers	p. 368
Sleeve Ejectors	p. 360	Angle Guide Pins	p. 365	Iso Springs	p. 369
Flat Ejectors	p. 361	Socket Head Cap Screws	p. 366	Mould Cycle Counter	p. 372
Core Pins	**p. 362**	Shoulder Screws	p. 367	Round Counters	p. 373

Core Pins ISO 6751 Non Hardened (Soft)

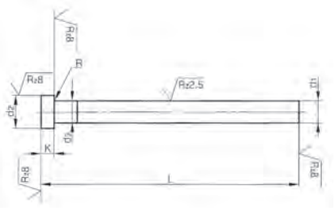

d1 g6	d2-0,2	k-0,05	R	d3	100	125	160	200	250	315
2	4	2	0,2	d_1 + 0,03	•	•	•	•		
2,2	4	2	0,3	d_1 + 0,03	•	•	•			
2,5	5	3	0,3	d_1 + 0,03	•	•	•			
3	6	3	0,3	d_1 + 0,03	•	•	•	•		
3,2	6	3	0,3	d_1 + 0,03	•	•	•	•		
3,5	7	3	0,3	d_1 + 0,03	•	•	•	•		
4	8	3	0,3	d_1 + 0,03	•	•	•	•		
4,2	8	3	0,3	d_1 + 0,03	•	•	•	•		
4,5	8	3	0,3	d_1 + 0,03	•	•	•	•		
5	10	3	0,3	d_1 + 0,03	•	•	•	•	•	
5,2	10	3	0,3	d_1 + 0,03	•	•	•	•		
5,5	10	3	0,3	d_1 + 0,03	•	•	•	•		
6	12	5	0,5	d_1 + 0,03	•	•	•	•	•	
6,2	12	5	0,5	d_1 + 0,03	•	•	•	•	•	
6,5	12	5	0,5	d_1 + 0,03	•	•	•	•	•	
7	12	5	0,5	d_1 + 0,03	•	•	•	•	•	
8	14	5	0,5	d_1 + 0,03	•	•	•	•	•	•
10	14	5	0,5	d_1 + 0,04	•	•	•	•	•	•
12	20	7	0,5	d_1 + 0,04	•	•	•	•	•	
16	20	7	0,5	d_1 + 0,04	•	•	•	•	•	•

Surface: Nitrided and Polished.
Material: 1.2344.
Hardness: 40 ± 2 HRC. Head 45 ± 5 HRC.

Order example
UDSAC+d1+L ex. UDSAC4160 (4X160 mm).

Ejector Pins	p. 355	**Dowel Pins**	**p. 363**	Spring Plungers	p. 368
Sleeve Ejectors	p. 360	Angle Guide Pins	p. 365	Iso Springs	p. 369
Flat Ejectors	p. 361	Socket Head Cap Screws	p. 366	Mould Cycle Counter	p. 372
Core Pins	p. 362	Shoulder Screws	p. 367	Round Counters	p. 373

Dowel Pins, DIN 6325

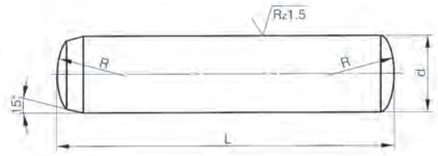

L \ d	2	3	4	5	6	8	10	12	14	16	20
6	•	•									
8	•	•	•	•							
10	•	•	•	•	•						
12	•	•	•	•	•						
14	•	•	•	•	•						
16	•	•	•	•	•	•	•				
18	•	•	•	•	•	•	•				
20	•	•	•	•	•	•	•	•			
24	•	•	•	•	•	•	•	•			
28	•	•	•	•	•	•	•	•			
32	•	•	•	•	•	•	•	•	•	•	
36		•	•	•	•	•	•	•	•	•	
40			•	•	•	•	•	•	•	•	•
45			•	•	•	•	•	•	•	•	•
50			•	•	•	•	•	•	•	•	•
55			•	•	•	•	•	•	•	•	•
60			•	•	•	•	•	•	•	•	•
70				•	•	•	•	•	•	•	•
80				•	•	•	•	•	•	•	•
90					•	•	•	•	•	•	•
100					•	•	•	•	•	•	•
120						•	•	•	•	•	•
130										•	•
140										•	•
150										•	•

Surface: Hardened and Polished.
Material: 1.3505.
Tolerance: m6.
Hardness: 60 ± 2 HRC.

Order example
CYL+d+L ex. CYL532 (5x32mm).

Ejector Pins	p. 355	**Dowel Pins**	**p. 363**	Spring Plungers	p. 368
Sleeve Ejectors	p. 360	Angle Guide Pins	p. 365	Iso Springs	p. 369
Flat Ejectors	p. 361	Socket Head Cap Screws	p. 366	Mould Cycle Counter	p. 372
Core Pins	p. 362	Shoulder Screws	p. 367	Round Counters	p. 373

Dowel Pins - Threaded - DIN 7979

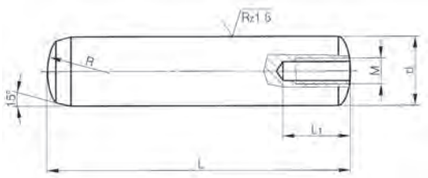

L1	10	12	16	16	20	20	25
L \ d	Ø 6 M4	Ø 8 M5	Ø 10 M6	Ø 12 M6	Ø 14 M8	Ø 16 M8	Ø 20 M10
16	•	•					
18	•	•					
20	•	•	•	•			
24	•	•	•	•			
28	•	•	•	•			
32	•	•	•	•	•	•	
36	•	•	•	•	•	•	
40	•	•	•	•	•	•	•
45	•	•	•	•	•	•	•
50	•	•	•	•	•	•	•
55	•	•	•	•	•	•	•
60	•	•	•	•	•	•	•
70	•	•	•	•	•	•	•
80	•	•	•	•	•	•	•
90	•	•	•	•	•	•	•
100	•	•	•	•	•	•	•
110		•	•	•	•	•	•
120		•	•	•	•	•	•

Surface: Hardened and Polished.
Material: 1.3505.
Tolerance: m6.
Hardness: 60 ± 2 HRC.

Order example
CYLG+d+L ex. CYLG832 (8x32mm).

Ejector Pins	p. 355	Dowel Pins	p. 363	Spring Plungers	p. 368
Sleeve Ejectors	p. 360	**Angle Guide Pins**	**p. 365**	Iso Springs	p. 369
Flat Ejectors	p. 361	Socket Head Cap Screws	p. 366	Mould Cycle Counter	p. 372
Core Pins	p. 362	Shoulder Screws	p. 367	Round Counters	p. 373

Angle Guide Pin

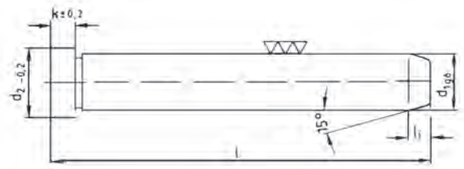

Part No.	d1 x l	d2	l1	k
EOC1040	10 x 40	12	4	3
EOC1060	10 x 60	12	4	3
EOC1080	10 x 80	12	4	3
EOC10100	10 x 100	12	4	3
EOC10120	10 x 120	12	4	3
EOC1260	12 x 60	16	7	6
EOC1280	12 x 80	16	7	6
EOC12100	12 x 100	16	7	6
EOC12120	12 x 120	16	7	6
EOC12140	12 x 140	16	7	6
EOC1460	14 x 60	18	7	8
EOC1480	14 x 80	18	7	8
EOC14100	14 x 100	18	7	8
EOC14120	14 x 120	18	7	8
EOC14140	14 x 140	18	7	8
EOC14160	14 x 160	18	7	8
EOC1680	16 x 80	20	7	8
EOC16100	16 x 100	20	7	8
EOC16120	16 x 120	20	7	8
EOC16140	16 x 140	20	7	8
EOC16160	16 x 160	20	7	8
EOC16180	16 x 180	20	7	8
EOC1860	18 x 60	22	7	8
EOC1880	18 x 80	22	7	8
EOC18100	18 x 100	22	7	8
EOC18120	18 x 120	22	7	8
EOC18140	18 x 140	22	7	8
EOC18160	18 x 160	22	7	8
EOC18200	18 x 200	22	7	8
EOC18240	18 x 240	22	7	8
EOC20100	20 x 100	24	7	8
EOC20120	20 x 120	24	7	8
EOC20160	20 x 160	24	7	8
EOC20200	20 x 200	24	7	8
EOC20240	20 x 240	24	7	8
EOC24100	24 x 100	28	7	15
EOC24120	24 x 120	28	7	15
EOC24140	24 x 140	28	7	15
EOC24160	24 x 160	28	7	15
EOC24200	24 x 200	28	7	15
EOC24240	24 x 240	28	7	15

Surface: Hardened and Polished.
Material: 1.7262.
Tolerance: g6.
Hardness: 60 ± 2 HRC.

Ejector Pins	p. 355	Dowel Pins	p. 363	Spring Plungers	p. 368
Sleeve Ejectors	p. 360	Angle Guide Pins	p. 365	Iso Springs	p. 369
Flat Ejectors	p. 361	**Socket Head Cap Screws**	**p. 366**	Mould Cycle Counter	p. 372
Core Pins	p. 362	Shoulder Screws	p. 367	Round Counters	p. 373

Socket Head Cap Screws

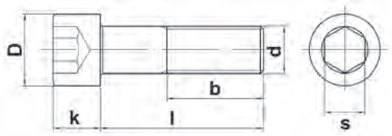

d	M1,6	M2	M2,5	M3	M4	M5	M6	M8	M10	M12	M14	M16	M18	M20	M24
Thread-pitch	0,35	0,40	0,45	0,50	0,70	0,80	1,00	1,25	1,50	1,75	2,00	2,00	2,50	2,50	3,00
D	3	3,8	4,5	5,5	7	8,5	10	13	16	18	21	24	27	30	36
k	1,6	2	2,5	3	4	5	6	8	10	12	14	16	18	20	24
b	15	16	17	18	20	22	24	28	32	36	40	44	48	52	60
s	1,5	1,5	2	2,5	3	4	5	6	8	10	12	14	14	17	19

	Thread Size Metric														
Length	1,6	2	2,5	3	4	5	6	8	10	12	14	16	18	20	24
3		•													
4	•	•													
5		•	•	•	•										
6	•	•	•	•	•	•									
8		•	•	•	•	•	•								
10		•	•	•	•	•	•	•	•						
12		•	•	•	•	•	•	•	•	•					
14				•	•	•	•	•	•	•					
15				•	•	•	•	•	•	•					
16				•	•	•	•	•	•	•					
18					•	•	•	•	•	•					
20				•	•	•	•	•	•	•					
22					•	•	•	•	•	•					
25				•	•	•	•	•	•	•	•	•			
30				•	•	•	•	•	•	•	•	•			
35					•	•	•	•	•	•	•	•	•	•	
40					•	•	•	•	•	•	•	•	•	•	•
45					•	•	•	•	•	•	•	•	•	•	•
50					•	•	•	•	•	•	•	•	•	•	•
55						•	•	•	•	•	•	•	•	•	•
60						•	•	•	•	•	•	•	•	•	•
65						•	•	•	•	•	•	•	•	•	•
70						•	•	•	•	•	•	•	•	•	•
75							•	•	•	•	•	•	•	•	•
80							•	•	•	•	•	•	•	•	•
90							•	•	•	•	•	•	•	•	•
100							•	•	•	•	•	•	•	•	•
110							•	•	•	•	•	•	•	•	•
120							•	•	•	•	•	•	•	•	•
130								•	•	•		•		•	•
140								•	•	•		•		•	•
150								•	•	•		•		•	•
160								•	•	•		•		•	•
180								•	•	•		•		•	•
200								•	•	•		•		•	•

Material: High tensile strength (12.9).
DIN 912/ISO 4762.

Order example
HCS-(Thread Size+(-)+Length) ex. HCS-16-35 (M16x35mm).

Ejector Pins	p. 355	Dowel Pins	p. 363	Spring Plungers	p. 368
Sleeve Ejectors	p. 360	Angle Guide Pins	p. 365	Iso Springs	p. 369
Flat Ejectors	p. 361	Socket Head Cap Screws	p. 366	Mould Cycle Counter	p. 372
Core Pins	p. 362	**Shoulder Screws**	**p. 367**	Round Counters	p. 373

Shoulder Screws, ISO 7379

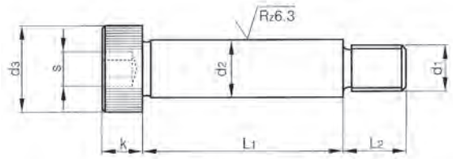

d2h8	6	8	10	12	16	20	24
d1	5 X 0,8	6 X 1	8 X 1,25	10 X 1,5	12 X 1,75	16 X 2	20 X 2,5
d3	10	13	16	18	24	30	36
K	4,5	5,5	7	8	10	14	16
L2	9,5	11	13	16	18	22	27
S	3	4	5	6	8	10	12
Kg/mm	0,68	1,15	3	6	11	28	55

L1	L1 h11						
10	•						
12	•	•					
16	•	•	•				
20	•	•	•	•			
25	•	•	•	•			
30	•	•	•	•	•		
35	•	•	•	•	•		
40	•	•	•	•	•	•	
45	•	•	•	•	•	•	
50	•	•	•	•	•	•	•
55		•	•	•	•	•	•
60		•	•	•	•	•	•
65		•	•	•	•	•	•
70		•	•	•	•	•	•
80			•	•	•	•	•
90				•	•	•	•
100				•	•	•	•
120				•	•	•	•

Material: High tensile strength (12.9).
ISO 7379.

Order example
UNBH+d2+L1 ex. UNBH610 (6 x 10 mm).

Ejector Pins	p. 355	Dowel Pins	p. 363	**Spring Plungers**	**p. 368**
Sleeve Ejectors	p. 360	Angle Guide Pins	p. 365	Iso Springs	p. 369
Flat Ejectors	p. 361	Socket Head Cap Screws	p. 366	Mould Cycle Counter	p. 372
Core Pins	p. 362	Shoulder Screws	p. 367	Round Counters	p. 373

Spring Plunger, Ball Type

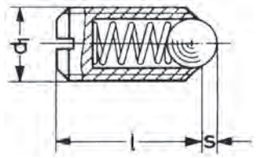

Part No.	d1	l	S	Ball Ø
WZ8087M3	M3	7	0,5	1,5
WZ8087M4	M4	9	0,8	2,5
WZ8087M5	M5	12	0,9	3
WZ8087M6	M6	14	1,0	3,5
WZ8087M8	M8	16	1,5	5
WZ8087M10	M10	19	2,0	6
WZ8087M12	M12	22	2,5	8
WZ8087M16	M16	24	3,5	10

Material: 1.0718.

Spring Plunger, Pin Type

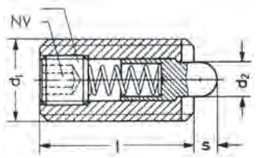

Part No.	d1	l	S	d2	NV
WZ8090M3	M3	12	1	1	0,7
WZ8090M4	M4	15	1,5	1,5	1,3
WZ8090M5	M5	18	2,3	2,4	1,5
WZ8090M6	M6	20	2,5	2,7	2
WZ8090M8	M8	22	3	3,5	2,5
WZ8090M10	M10	22	3	4	3
WZ8090M12	M12	28	4	6	4
WZ8090M16	M16	32	5	7,5	5

Material: 1.0718.

Spring Plunger, Straight

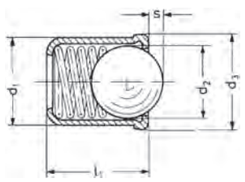

Part No.	d1	l1	S	d2	d3
WZ80934	4	5	0,7	3	4,6
WZ80935	5	6	1	4	5,6
WZ80936	6	7	1,5	5	6,5
WZ80938	8	9	1,8	6,5	8,5

Material: 1.4303.

Ejector Pins	p. 355	Dowel Pins	p. 363	Spring Plungers	p. 368
Sleeve Ejectors	p. 360	Angle Guide Pins	p. 365	**Iso Springs**	**p. 369**
Flat Ejectors	p. 361	Socket Head Cap Screws	p. 366	Mould Cycle Counter	p. 372
Core Pins	p. 362	Shoulder Screws	p. 367	Round Counters	p. 373

Die springs ISO 10243 - Steel

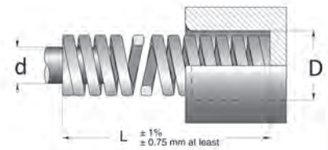

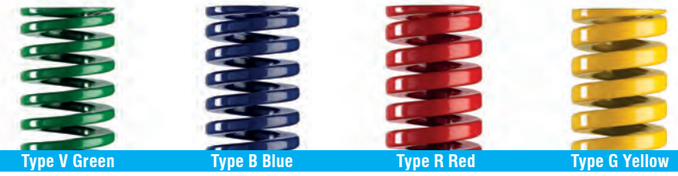

D x L	d	Type V Green	Type B Blue	Type R Red	Type G Yellow
10 x 38	5	•	•	•	•
10 x 44	5	•	•	•	•
10 x 51	5	•	•	•	•
10 x 64	5	•	•	•	•
10 x 76	5	•	•	•	•
10 x 305	5	•	•	•	•
13 x 25	6,3	•	•	•	•
13 x 32	6,3	•	•	•	•
13 x 38	6,3	•	•	•	•
13 x 44	6,3	•	•	•	•
13 x 51	6,3	•	•	•	•
13 x 64	6,3	•	•	•	•
13 x 76	6,3	•	•	•	•
13 x 89	6,3	•	•	•	•
13 x 102	6,3	•	•	•	•
13 x 305	6,3	•	•	•	•
16 x 25	8	•	•	•	•
16 x 32	8	•	•	•	•
16 x 38	8	•	•	•	•
16 x 44	8	•	•	•	•
16 x 51	8	•	•	•	•
16 x 64	8	•	•	•	•
16 x 76	8	•	•	•	•
16 x 89	8	•	•	•	•
16 x 102	8	•	•	•	•
16 x 115	8	•	•	•	•
16 x 305	8	•	•	•	•
20 x 25	10	•	•	•	•
20 x 32	10	•	•	•	•
20 x 38	10	•	•	•	•
20 x 44	10	•	•	•	•
20 x 51	10	•	•	•	•
20 x 64	10	•	•	•	•
20 x 76	10	•	•	•	•
20 x 89	10	•	•	•	•
20 x 102	10	•	•	•	•
20 x 115	10	•	•	•	•
20 x 127	10	•	•	•	•
20 x 139	10	•	•	•	•
20 x 152	10	•	•	•	•
20 x 305	10	•	•	•	•

Order example
Type+Dimension+Length: V10076 (Green ø 10 x 76 mm).
V10305 (Green ø 10 x 305 mm).

Ejector Pins	p. 355	Dowel Pins	p. 363	Spring Plungers	p. 368
Sleeve Ejectors	p. 360	Angle Guide Pins	p. 365	**Iso Springs**	**p. 369**
Flat Ejectors	p. 361	Socket Head Cap Screws	p. 366	Mould Cycle Counter	p. 372
Core Pins	p. 362	Shoulder Screws	p. 367	Round Counters	p. 373

Die springs ISO 10243 - Steel

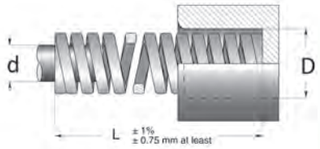

D x L	d	Type V Green	Type B Blue	Type R Red	Type G Yellow
25 x 25	12,5	•	•	•	•
25 x 32	12,5	•	•	•	•
25 x 38	12,5	•	•	•	•
25 x 44	12,5	•	•	•	•
25 x 51	12,5	•	•	•	•
25 x 64	12,5	•	•	•	•
25 x 76	12,5	•	•	•	•
25 x 89	12,5	•	•	•	•
25 x 102	12,5	•	•	•	•
25 x 115	12,5	•	•	•	•
25 x 127	12,5	•	•	•	•
25 x 139	12,5	•	•	•	•
25 x 152	12,5	•	•	•	•
25 x 178	12,5	•	•	•	•
25 x 203	12,5	•	•	•	•
25 x 305	12,5	•	•	•	•
32 x 38	16	•	•	•	•
32 x 44	16	•	•	•	•
32 x 51	16	•	•	•	•
32 x 64	16	•	•	•	•
32 x 76	16	•	•	•	•
32 x 89	16	•	•	•	•
32 x 102	16	•	•	•	•
32 x 115	16	•	•	•	•
32 x 127	16	•	•	•	•
32 x 139	16	•	•	•	•
32 x 152	16	•	•	•	•
32 x 178	16	•	•	•	•
32 x 203	16	•	•	•	•
32 x 254	16	•	•	•	•
32 x 305	16	•	•	•	•

Order example
Type+Dimension+Length: V10076 (Green ø 10 x 76 mm).
V10305 (Green ø 10 x 305 mm).

Mould Components / ISO springs

Ejector Pins	p. 355	Dowel Pins	p. 363	Spring Plungers	p. 368
Sleeve Ejectors	p. 360	Angle Guide Pins	p. 365	**Iso Springs**	**p. 369**
Flat Ejectors	p. 361	Socket Head Cap Screws	p. 366	Mould Cycle Counter	p. 372
Core Pins	p. 362	Shoulder Screws	p. 367	Round Counters	p. 373

Die springs ISO 10243 - Steel

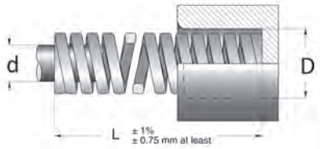

D x L	d	Type V Green	Type B Blue	Type R Red	Type G Yellow
40 x 51	20	•	•	•	•
40 x 64	20	•	•	•	•
40 x 76	20	•	•	•	•
40 x 89	20	•	•	•	•
40 x 102	20	•	•	•	•
40 x 115	20	•	•	•	•
40 x 127	20	•	•	•	•
40 x 139	20	•	•	•	•
40 x 152	20	•	•	•	•
40 x 178	20	•	•	•	•
40 x 203	20	•	•	•	•
40 x 254	20	•	•	•	•
40 x 305	20	•	•	•	•
50 x 64	25	•	•	•	•
50 x 76	25	•	•	•	•
50 x 89	25	•	•	•	•
50 x 102	25	•	•	•	•
50 x 115	25	•	•	•	•
50 x 127	25	•	•	•	•
50 x 139	25	•	•	•	•
50 x 152	25	•	•	•	•
50 x 178	25	•	•	•	•
50 x 203	25	•	•	•	•
50 x 229	25		•		
50 x 254	25	•	•	•	•
50 x 305	25	•	•	•	•
63 x 76	38	•	•	•	•
63 x 89	38	•	•	•	•
63 x 102	38	•	•	•	•
63 x 115	38	•	•	•	•
63 x 127	38	•	•	•	•
63 x 152	38	•	•	•	•
63 x 178	38	•	•	•	•
63 x 203	38	•	•	•	•
63 x 229	38	-	•	-	-
63 x 254	38	•	•	•	•
63 x 305	38	•	•	•	•

Order example
Type+Dimension+Length: V10076 (Green ø 10 x 76 mm).
V10305 (Green ø 10 x 305 mm).

Mould Components

12

Ejector Pins	p. 355	Dowel Pins	p. 363	Spring Plungers	p. 368
Sleeve Ejectors	p. 360	Angle Guide Pins	p. 365	Iso Springs	p. 369
Flat Ejectors	p. 361	Socket Head Cap Screws	p. 366	**Mould Cycle Counter**	**p. 372**
Core Pins	p. 362	Shoulder Screws	p. 367	Round Counters	p. 373

Mould Cycle Counter – Fixed Half Mouldside

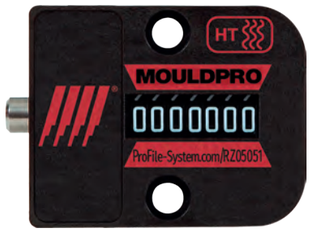

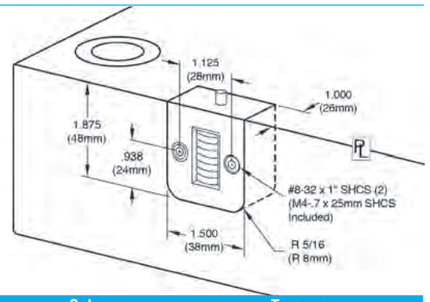

Part No.	Orientation	# digits	Colour	Temp range
CC-200-R-HT	Right (moving half)	7	Black/Red	190°C

Mould Cycle Counter – Moving Half Mouldside

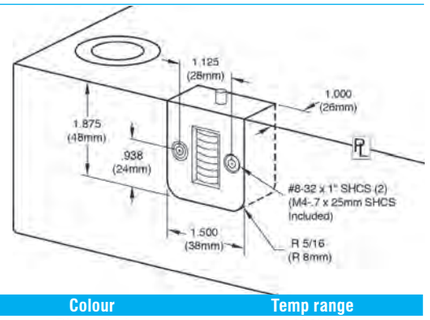

Part No.	Orientation	# digits	Colour	Temp range
CC-200-L-HT	Left (fixed half)	7	Black/Red	190°C

Mouldpro Cycle Counter positively monitors mold activity, validates process monitoring data, and assists mold maintenance procedures.

- Maximum operating temperature is 190°
- Counter: Non-resettable mechanical, 7-digit
- High Temp housing
- Reliable and tested quality
- Specified worldwide by leading OEM's
- Supplied with serial Number
- Socket head cap screws are included

Ejector Pins	p. 355	Dowel Pins	p. 363	Spring Plungers	p. 368
Sleeve Ejectors	p. 360	Angle Guide Pins	p. 365	Iso Springs	p. 369
Flat Ejectors	p. 361	Socket Head Cap Screws	p. 366	Mould Cycle Counter	p. 372
Core Pins	p. 362	Shoulder Screws	p. 367	**Round Counters**	**p. 373**

Round Counter – Moving Half Mouldside

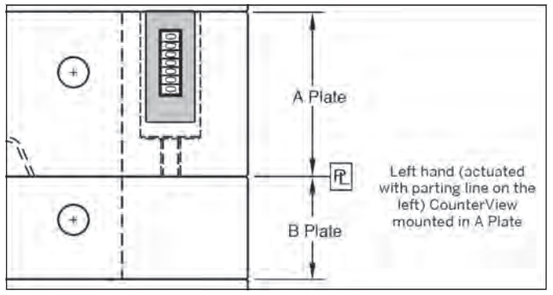

Round Counter – Fixed Half Mouldside

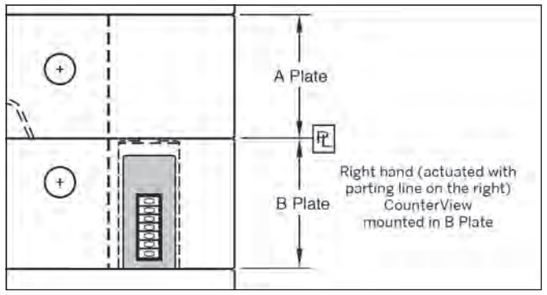

Part No.	Direction	# Digit	Colour	Temp. Range
CR100	Right hand	7	Black	120°C
CL100	Left hand	7	Black	120°C

The Round counters can be installed in the A or B plates with a minimum thickness of 1.875" (47mm). Larger plates utilize a threaded rod (included with each) that is pre-machined to the appropriate length for standard plate thicknesses to provide consistent actuation.

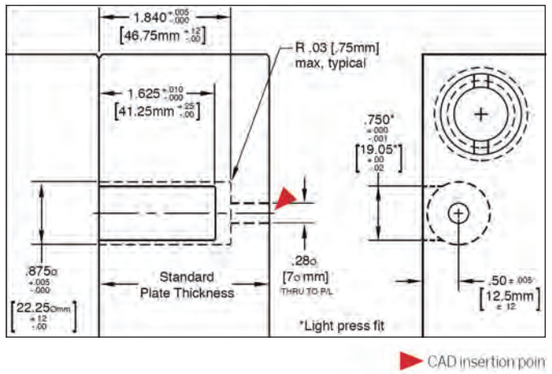

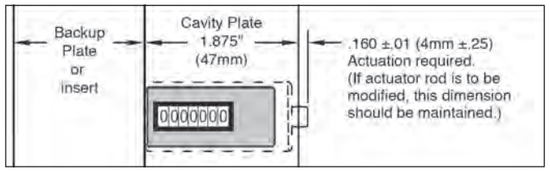

Extension Rods

Part No.	L
CER-56	56
CER-66	66
CER-76	76
CER-96	96
CER-116	116
CER-196	196

L=Length to make plate thickness.

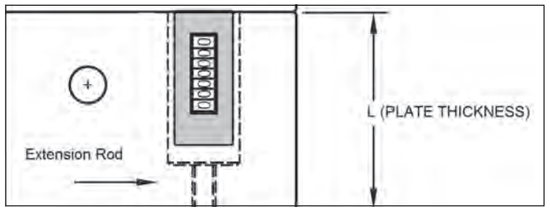

Explanation of Symbols

- Tapered Thread BSPT
- Water
- Oil
- Temperature max.
- Only in combination with Push-Lock hose and Push-Lock hosetail
- TS Safety coupling
- Optional colour clips see page 25

Notes

INDEX

A

Abrasives 298
Absorbents 101
Aluminum Profiles 163
Alu Manifolds 68
Alu Profiles 163
Analogue Flow Meters 83

B

Balances 151
Ball Valves 61
BBI Couplings 32
Blanking Plugs 59, 60, 69
Blow Guns 317
Brackets 218
Bronze Tools 295

C

Cable Connectors 265
Cable Cutter 137
Cable Glands 138
Cables 139
Camlock Couplings 144
Carbide Burs 305
Centering Pin 182
Channel Nuts 162
Clamps 154
Connectors 125
Copper Gauze 304
Core Pins 362
Corner Brackets 167
Couplers 6
Cross Clamps 175
Cross Joint Connectors 168
Cross Tube Connectors 179
Cylinders & Slides 250

D

Deburring Tools 294
De-Scaling 89
Diamond Files 299
Diamond Paste 305
Digital Flow Monitors 73
Dock & Lock Grippers 239
Dowel Pins 363

E

Ejector Couplings 322
Ejector Pins 355
Elbow Arms 181
Electronics & Sensors 264
End Connectors 170
End of Arm Tooling 154
Expansion Grippers 235
Extension Tubes 182
Eye Bolts 343

F

Filters 92
Finger Grippers 218
Fittings 54
Flat Ejectors 361
Flow Controller 263
Flow Meter 75, 86
Flow Regulator 87

G

Gate Cutters 291
General Purpose Grippers 228
Gloves 289
Gripper Arms 180
Gripper Suspension 182
Grippers 208

H

Hammers 297
Heat Sleeve 48
Heat Tape 48
Heater Bands 117
Hopper Magnets 150
Hose Assembly Tool 51
Hose Clamping 52
Hose Clamps 147
Hose Cutting 50
Hose Crimper 52
Hose Protection 48
Hoses 40
Hot Air Hoses 146
Hot Runner Controllers 113
Hydraulic Iso Couplers 328

I

Inline Flow Controller 263

L

Lifting Chain Slings 345
Lifting Points 341
Linear Transducers 326
Loader Hoses 145
Locating Pin 161
Lubricant 106

M

Machine Mounts 325
Magnetic Sensors 266
Magnifying Glasses 319
Manifolds 68
Material Scoops 150
Measuring Tools 318
Mechanical Clamps 335
Mini Ball Valves 61
Mixing Nozzles 282
Moisture Analyser 151
Mould Cycle Counter 372
Mould Feet 348
Mould Release Agent 105
Mould Screens 321
Mould Splitting Tables 349
Mounting Brackets 178
Multi Couplings 39

N

Nipper Blades 244
Nippers 242
Nozzles 271

O

OEM Nozzle Tips 275

P

Parallel Grippers 231
Pliers 295
Polishing 298
Power Clamps 333
Power Grippers 217
Profile Connectors 166
Profiles 162
Protection 102
Pry Bars 296
Purging Compound 110
Push In Fittings 67
Push On Fittings 55
Push On Hoses 43
Push to Connect Fittings 261

Q

Quick Change System 156

R

Reducer Fittings 57
Release 104
Removable Nozzle Tips 271
Round Counters 373

S

Safety Couplings 7
Safety Sleeve 48
Screw Tips 288
Sealant & Tape 71
Shackles 343
Shoulder Screws 367
Sleeve Ejectors 360
Socket Head Cap Screws 366
Soft Tools 295
Spring Plungers 368
Sprue Grippers 209
Straight Studs 338
Super Stones 307
Suspensions 188

T

Thermal Cameras 142
Thermocouples 122
Thermometers 140
Tip Spanner 289
T-Nuts 339
Tubes 263

V

Vacuum Cups 194
Valves 61

W

Wall Mounts 158
Water Treatment 91

Copyright, Disclaimer

Mouldpro ApS makes every effort to maintain the accuracy and quality of the information provided in this Catalogue. However, Mouldpro cannot guarantee and assumes no legal liability or responsibility for the accuracy or completeness of the information provided. The information contained in this catalogue is for general guidance only. You should neither act, nor refrain from action, on the basis of any such information. You should take appropriate professional advice on your particular circumstances because the application of our equipment may vary depending on particular circumstances.

The copyright of all content in this catalogue is owned by Mouldpro and/or the various manufacturers of our equipment. No part of the Mouldpro catalogue may be changed, reproduced, stored in or transmitted on any website or medium without the prior written permission of Mouldpro.

In case of any questions or remarks, feel free to contact us.

MOULDPRO APS
Baltorpbakken 10, DK-2750 Ballerup, Denmark
Phone: **+45 7020 3131**

DISTRIBUTOR

mouldpro.com